Natural Light Solar Attic Fan

Installation Instructions

Natural Light Energy Systems
10821 North 23rd Avenue, Suite 1
Phoenix, AZ 85029
800-363-9865
www.solaratticfan.com

IMPORTANT: Before Installing

Please take the time to read through the ENTIRE instructions prior to starting any work.

Precautions

1. Ensure normal safety precautions are taken when using tools and walking on roofs.
2. Do not cut any structural members in the house.
3. Measure twice and cut once.

Tools Required

- Reciprocating Saw
- Marking Pen
- String
- Caulking Gun
- Screw Gun
- Ladders
- Measuring Tape
- Razor Knife

Components

Note: Exploded view for illustrative purposes.
Unit comes pre-assembled.

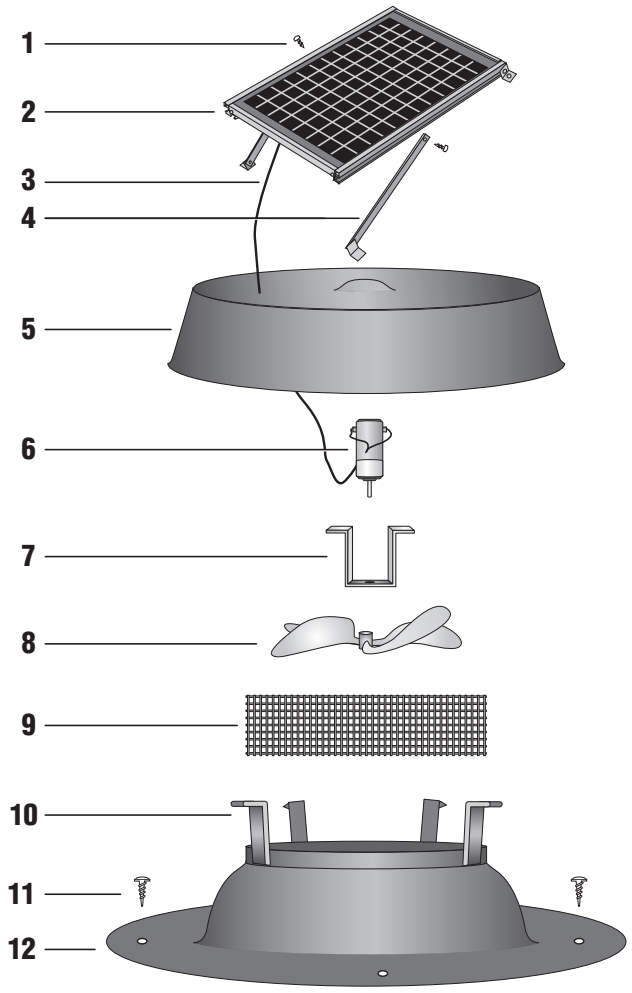

1. (2) #8 x 1″ Self-Tapping Screws
2. Custom Solar Panel
3. Wire Lead
4. Adjustable Solar Panel Bracket
5. Aluminum Shroud
6. Custom DC Motor
7. Motor Isolation Bracket
8. Air Drive Precision Pitch Blade
9. 4″ x 48″ Stainless Steel Wire Mesh
10. Rugged 14 Gauge Shroud Support Bracket
11. (6) #6 x 1 1/2″ Stainless Steel Phillips Head Screws
12. Aluminum Flashing

Installation Pointers

When determining location of the unit, try to place the solar attic fan on the south side of the roof, also consider potential problems such as objects shading the unit during certain times of the day. The unit should also be centered on the roof and the center of the unit should be about 2 feet down from the roof ridge.

Step 1

Choose location for solar vent unit, south exposure is best. If a southern exposure is not feasible for your installation, the fan can be installed on any other exposure and the solar panel adjusted to capture maximum sunlight.

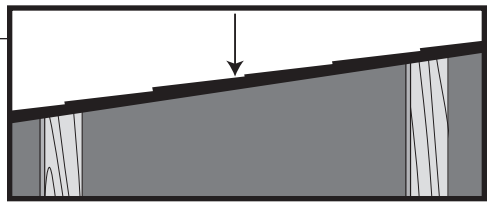

Step 2

Hammer a nail at the center of the location chosen between rafters for the solar attic fan unit. The center of the unit should be about 2 feet down from the ridge. Attach a string to the nail. Measure 9.5″ of string and attach a marking pen to the string, **see diagram**. Scribe a 19″ circle onto the roof shingles or use the template created earlier.

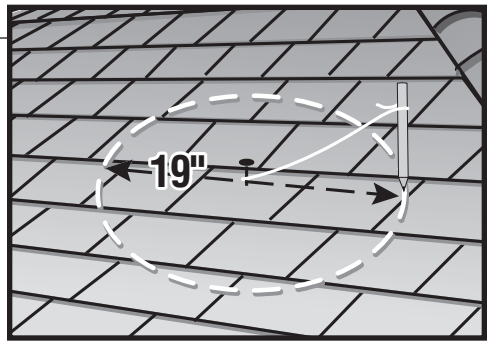

Step 3

With a reciprocating saw, cut the diameter of the hole.

<u>IMPORTANT:</u> The solar attic fan must be installed between the roof rafters or over a roof rafter. DO NOT CUT THROUGH ANY FRAMING MEMBER.

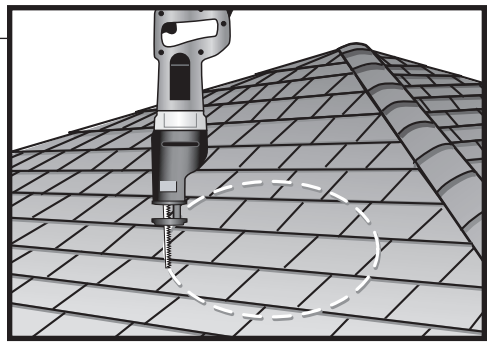

Step 4

Roof rafters are generally 16″ or 24″ on center. For 16″ on center installations, a roof rafter will run through the cut hole - **do not cut the rafter** (see diagram). For 24″ on center installations, center the unit placement between the rafters. **NEVER CUT THROUGH ANY ROOF RAFTERS. LEAVE ALL FRAMING MEMBERS IN PLACE.** Only remove roof sheathing.

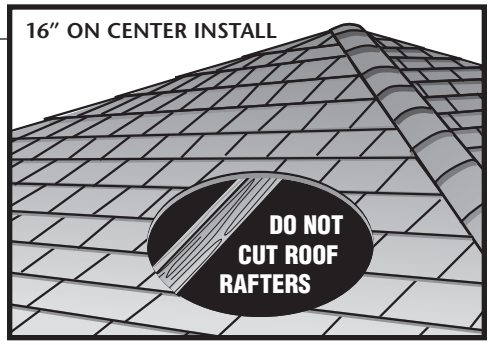

Step 5

With a razor knife, cut a four inch slit through the shingles and tar paper at the three and nine o'clock position of the flashing. This allows for the foot print of the flashing to be inserted under the shingles.

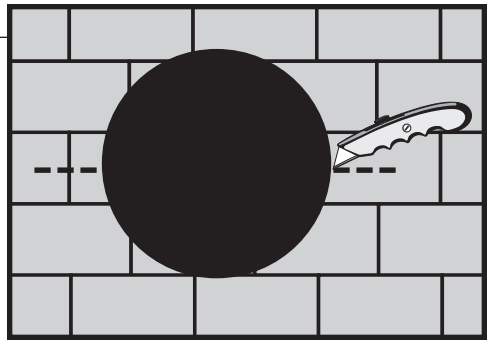

Step 6

Insert the reciprocating saw blade sideways at the three o'clock position and commence cutting the roofing nails up and around to the nine o'clock position. This process removes the nails that will prevent the flashing foot print from sliding up underneath the shingles.

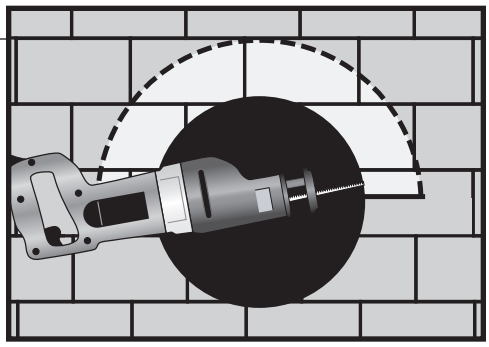

Step 7

Caulk **underside** of flashing with the provided caulking material. Two concentric rings of caulking material is sufficient.

NOTE: Installation on tile roofs will require the use of a skirt.

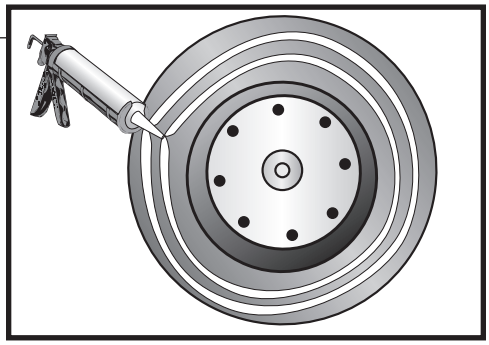

Step 8

Taking care not to smear caulk on the exposed shingles, slide flashing under tar paper and shingles and force flashing up until the shingles come in contact with the raised portion of the flashing. The bottom side of the flashing will be on top of the shingles. Secure flashing with four Phillips head screws at the 3:00, 6:00, 9:00 and 12:00 positions. The 3:00 and 9:00 positions screws should go under the shingles. The 6:00 and 12:00 position screws should go on top of the shingles.

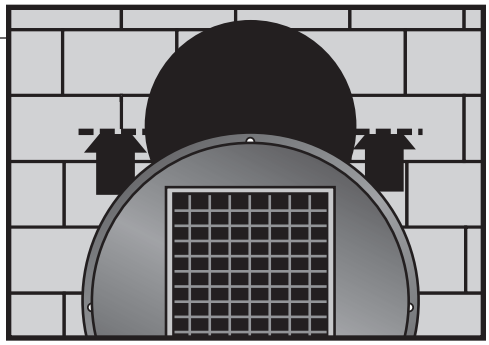

Step 9

At the 6:00 and 12:00 positions, caulk over the screw head, since it will be exposed to the weather. Use remaining caulk to seal the areas where the 4" slits were made and around the area where the shingles meet with the raised area of the flashing.

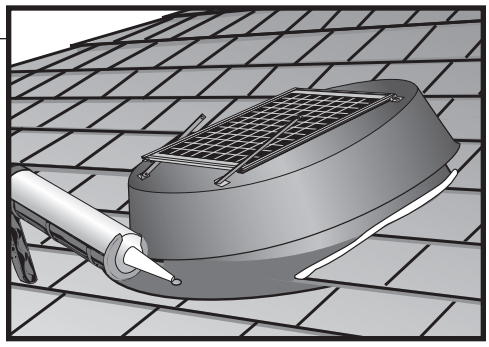

Step 10

Adjust the solar panel to the position it will collect the most sunlight throughout the day. Using the two self-tapping screws provided, screw the adjustable brackets to the side of the solar panel frame making sure the screws do not damage the panel.

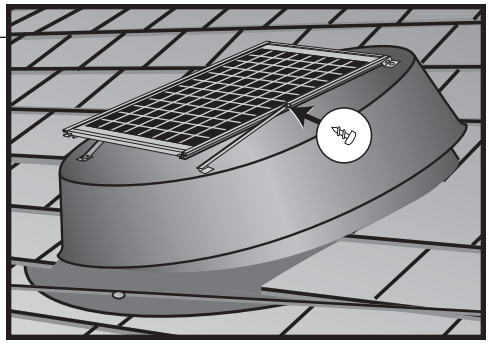

Natural Light
Solar Attic Fan

W A R R A N T Y

This Natural Light Solar Attic Fan has a 25 year warranty on the housing, 15 year warranty on the solar panel and a 5 year warranty on the motor.

IMPORTANT: PLEASE COMPLETE AND MAIL THE CARD BELOW AS SOON AS YOUR SOLAR ATTIC FAN IS INSTALLED. This card will serve as proof of your purchase, should you misplace your original invoice.

The manufacturer warrants this product to be free from defects in material and manufacturer's workmanship for a period of five years on the motor, 15 years on the solar panel, and 25 years on the housing, from the date of installation. This warranty is subject to proper installation of the unit in accordance with the manufacturer's written installation instructions. The manufacturer will not be liable for any special, incidental or consequential damages in any way related to, or arising out of, defects in, or damage to, the solar attic fan.

This warranty gives you specific legal rights, and you may have other rights which vary from state to state concerning exclusion or limitation of incidental or consequential damages.

Please fill out the form below and mail it to:

Natural Light Energy Systems • 10821 North 23rd Avenue, Suite 1 • Phoenix, AZ 85029

R E G I S T R A T I O N

Natural Light Solar Attic Fan Installer: _____

Date of Purchase: _____

Customer Name: _____

Address: _____

City: _____ State: _____ Zip: _____

Customer Survey

Are you satisfied with the performance? Y N

What made you choose our product?

_____

Were you satisfied with the installation job?

_____

Comments:

_____