# 1/10 SCALE CRAWLER EX86110 PIONEER

## Specifications:

| LENGTH | WIDTH | HEIGHT | WHEEL BASE | DIAMETER OF WHEEL | WIDTH OF WHEEL | GEAR RATIO | SERVO | WEIGHT |
|---|---|---|---|---|---|---|---|---|
| 560mm | 240mm | 240mm | 313mm | 120mm | 45mm | 54:1 | 15kg | 2600g |

### Spare Part

### Spare Part

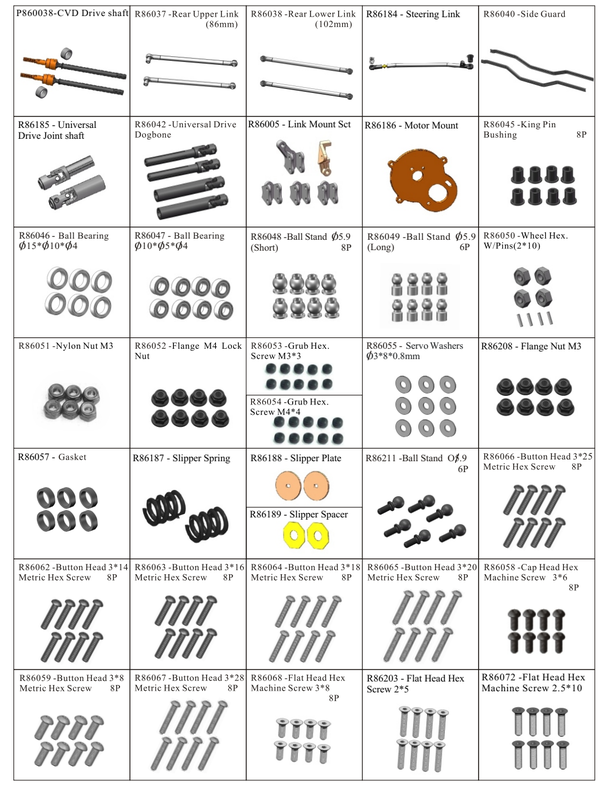


### Spare Part

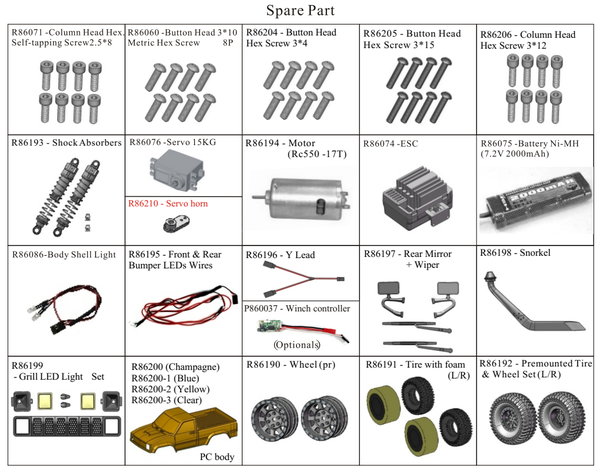


### Upgradable Optionals

## Transmission Box Set

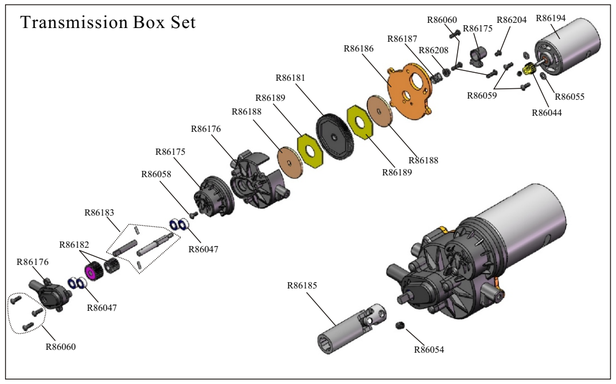


## Drive Gear Set

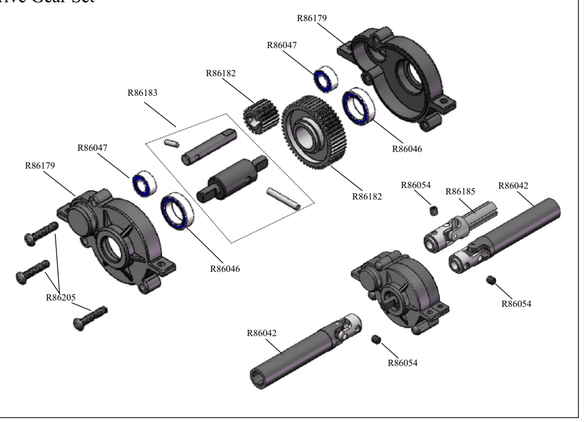


## Front Drive System Assemble

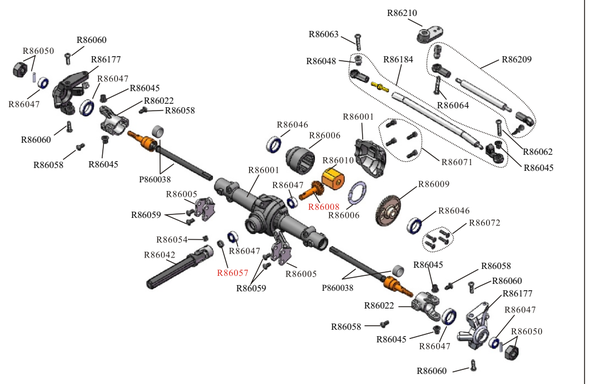


## Rear Drive System Assemble

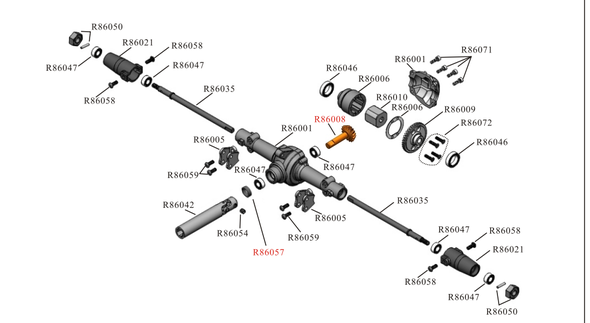


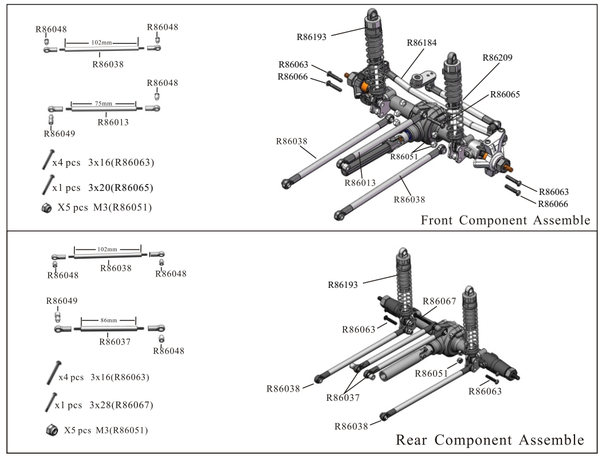


## Assemble Left and Right Beam

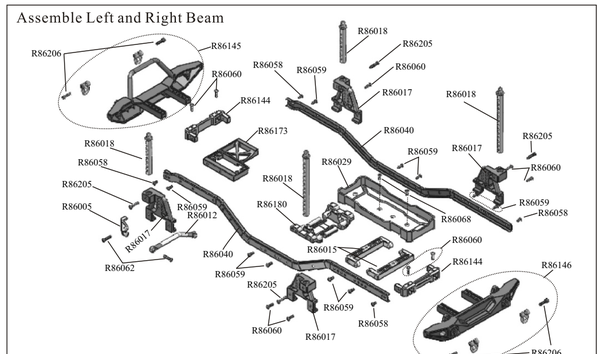


## Transmission Box Set Assembly

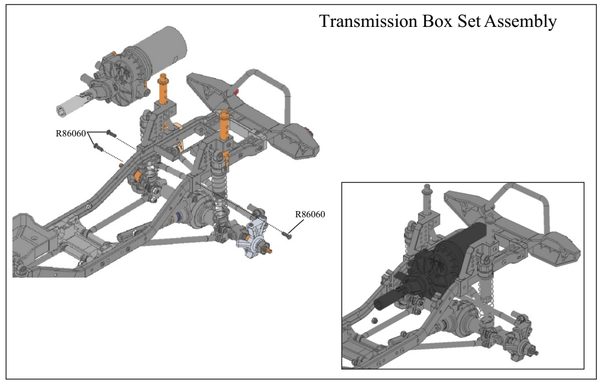


## Assemble Electric System

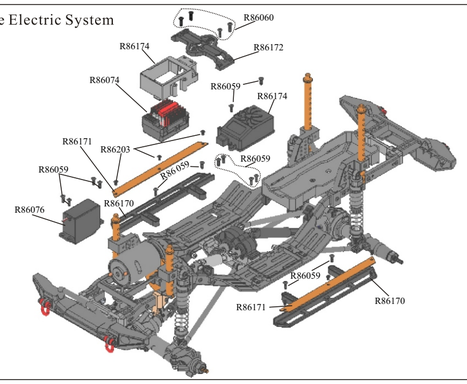


## (Left & Right) Foot Plate Assembly

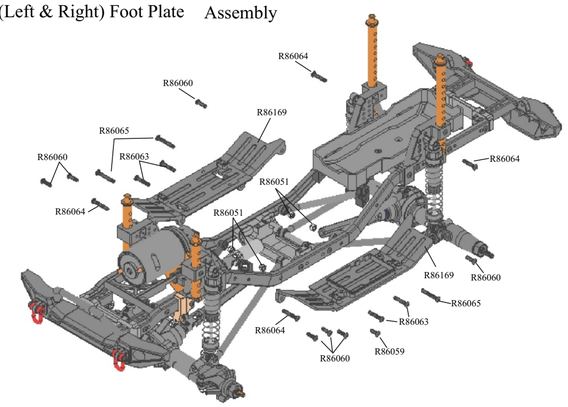


## Wheel/Battery Assembly

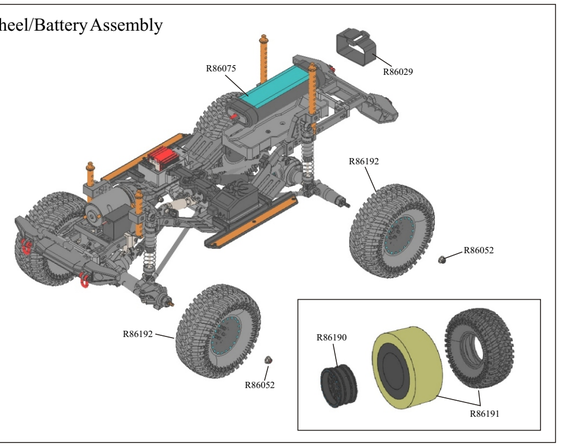


8611020190628