1/10th Reaf Full Scale Seraight Axle Truck

Specifications:

LENGTH	WIDTH	HEIGHT	WHEEL BASE	WHEEL TEACK	GROUND CLEARANCE	DIAMETER OF WHEEL	WIDTH OF WHEEL	GEAR RATIO	WEIGHT
495mm	300mm	225mm	325mm	255mm	55mm	140mm	55mm	1:10.9	2400g

Spare Part

70552-Chassis	70553-Receiver Box Case	70554-Motor Cover	70555-Rear Lower Link	70556-Front Lower Link
70557-Link Rod End	70558-Sway Bar	70559-Body Roll Cage	70561-Rear Tower	70562-Motor Mount
70564-Bttery Box Cover	70512-Rear Link Mount A	08007- Body Post	70519-Front Upper Top Plate	70533-Main Cear(81T)
70534-Helmat	70571-Front/ Rear Gear Box	70572-Front Bumper	70573-Rear Link Mount	70574-Wheel Rim
70575-Tire W/Foam	70576-Wheel Complete L/R	70607-Rear Straight Axle Cover	70578-Front Shock Tower	08005-Front Lower Suspension Arm
02014-Steering Hubs (L/R)	02015-Front Hub Carrier (L/R)	02051-Gear Box	20722-Front/Rear Suspension Mount	08001-Shock Absorber
18120-Universal Drive Dogbone	70107-Steering Sway Arm Assembly	02039-Differential Box (With 2 Rings & Steel Washers)	02024-Diff Gear Complete (Front)	70577-Rear Shaft

Spare Part

70540-Medium Shafts	70546-Shock Ball Head	02033-Wheel Axle	02032-Universal Joint Cup C	02016-Universal Joint Cup B+Grub Screw
08059-Front/Rear Dogbone (89.5mm)	70566-Centre Dogbone (89mm)	02030-Drive Gear	08074-Crown Gear(38T) (Coper infiltration)	02066-Diff.Pinions+Bevel Gears+Pin
60161-Pinion Cear(18T)	70124-Steering Post	02036-3*44mm Front Suspension Arm Pin A	08020- Front Lower Arm Pin B 3*33mm	08042-Front/Rear Link
70123-Servo Saver Assembly	02173-Suspension Arm	08072-Shock Ball Head Holder 2	18030-Rod end Ball ϕ5.9 6P	06007-Shock Ball Head
14559-Ball Bearing ϕ8*5*2.5	02138-Ball Bearing ϕ15*10*4	02139-Ball Bearing ϕ10*5*4	02079-Oil Bearing ϕ15*ϕ10*4	02080-Oil Bearing ϕ5*10*4
60242-Steering Shaft Bush	02101-Steering Bushing	02100-Wheel Hex	08027-Pin 2*10mm	02102-Nylon Nut M3
70129-Flange M4 Lock Nut	70127-E-Clip ϕ(2.5)	50043-E-Clips ϕ4mm	02053-Body Clip	02099-Grub Hex.Screw M4*4

Spare Part

02086-Round Head Self-Tapping Screw 2*10 10P	02194-Round Head Self-Tapping Screw 2.6*12 4P	85825-Flat Head Hex Machine Screw 3*10 4P	14576-Flat Head Hex Machine Screw 3*14 10P	70550-Flat Head Hex Machine Screw 3*16 4P
14586-Cap Head Hex Machine Screw 3*6 8P	82045-Cap Head Hex Machine Screw 3*8 8P	50100-Cap Head Hex Machine Screw 3*10 8P	50101-Cap Head Hex Machine Screw 3*12 12P	14582-Cap Head Hex Machine Screw 3*14 10P
82046-Cap Head Hex Machine Screw 3*18 10P	82047-Cap Head Hex Machine Screw 3*20 8p	70548-Cap Head Hex Machine Screw 3*22 4P	70549-Front Lower Suspension Arm Screws 3*30 4P	85844-Ring Head Self Tapping Screws 3*8 4P
70560-PVC Clear Body	SP6004-Servo 6kg	03200-Battery Ni-MH (7.2V 2000mAh)	03300-Motor Heat Proof Cover	03064-ESC (40A)
13825-Motor (Rc550) -8517	60298-Servo Arm	90819-Receiver 2.4GHZ (Waterproof)	90820-Transmitter 2.4G	

Upgradable Optionals

705019-Rear Lower Link	705020-Rear Upper Link	705004-Rear Link Mount A	705023-Rear Link Mount	705007-Front Upper Top Plate
705021-Motor Mount	705012-Steering Sway Arm Assembly	705022-Drive Shaft	108837-Aluminum Body Post-4P (truck)	180016-Wheel Hex Mount W/Pins (2*10) (AL.)
70542-Front Shock Absorber(Short)	70543-Rear Shock Absorber(Long)	70544-Ball Head Of Front Shock (5MM)	70545-Ball Head Of Rear Shock (7MM)	102210-Aluminum Front Hub Carrier(L/R)+Flat Head Mechnical Screws 3*15mm*2P
102211-Steering Hub (L/R)(AL.)+Cap Head Mechnical Screws 3*12*2P/3*11mm*2P	108119-Front Lower Arm (AL.)+Cap Head Screw M3*14mm Old:108819	108122-Aluminum Shock Tower+Cap Head Machine Screw 3*12 Old:108822	106617-Front/Rear & Servo link(AL.)+Flat Head Mechnical Screws 3*14mm*4P+Nut M3*4P	108015-Universal Drive Joint
03205-Lipo Battery 7.4V 3500mAh	37022-Brushles ESC (60A)	03302-Brushless Motor 3300KV	SP15002-Servo 15kg	706006-Rear Straight Axle Cover
705024-Link Mount	102048-Aluminum Nut M3	102049-Aluminum Nut M4		

1. Differential Assembly

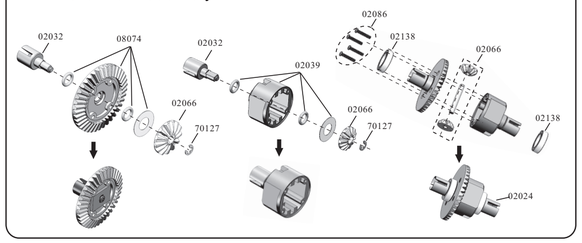

2.Gear Box

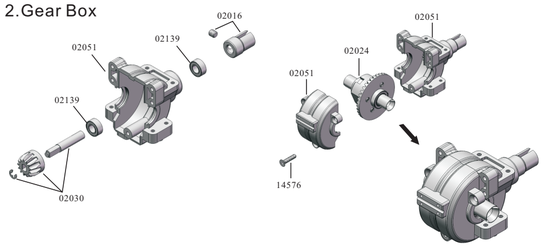

3.Front Shock Tower

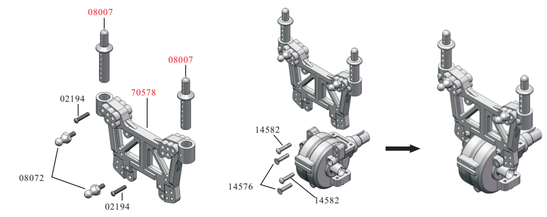

4.Front Suspension(R)

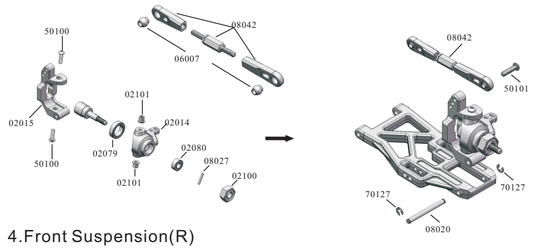

5.Front Suspension(L)

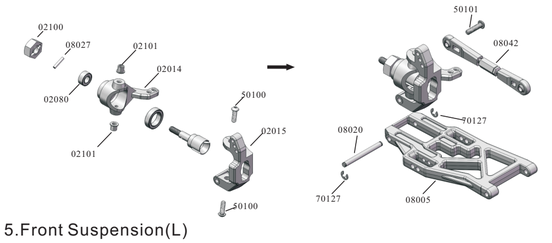

6.Servo Save

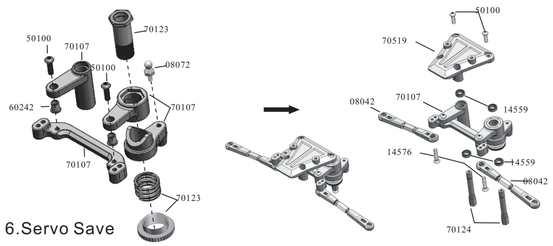

7.Front Drive System

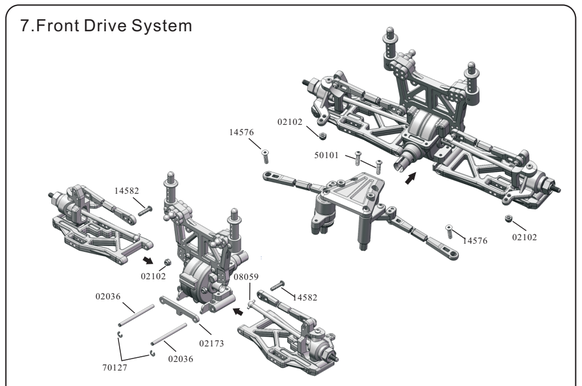

8.Front Shock

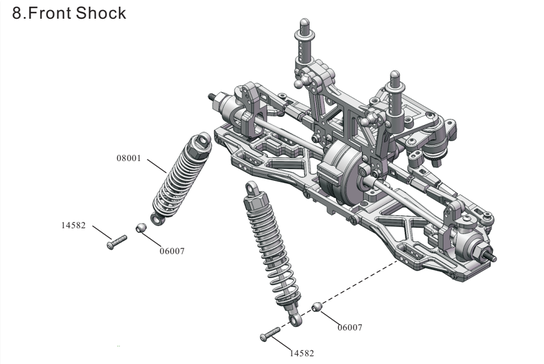

9.LED Light Mounting

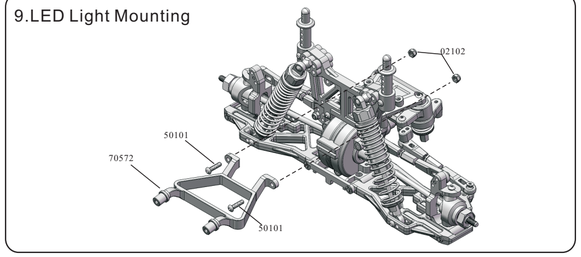

10.Rear Gear Box

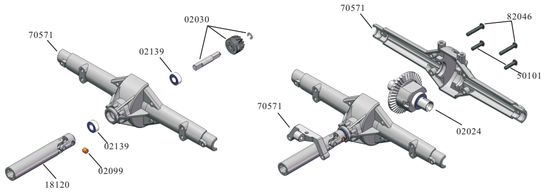

11.Rear Drive Shaft

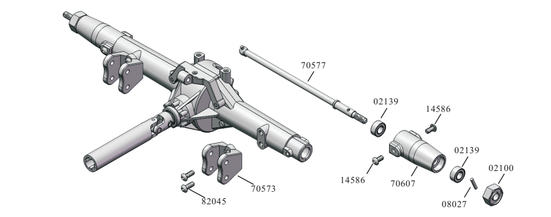

12.Rear

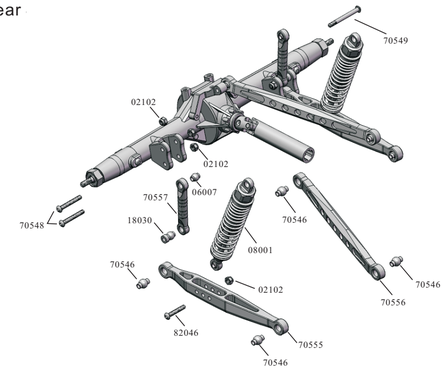

13.Battery Tray

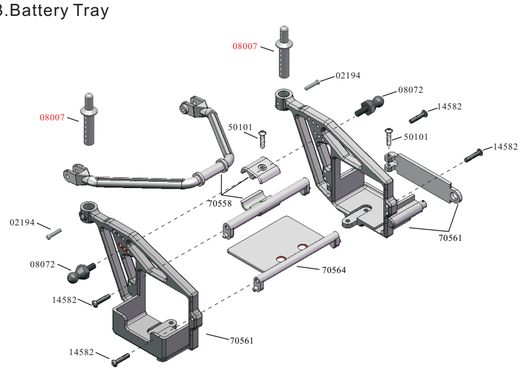

14.Chassis Mounting

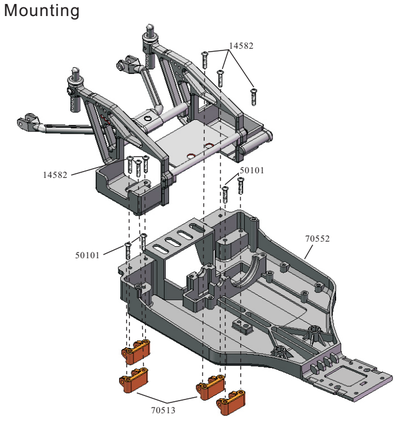

15.Battery Tray

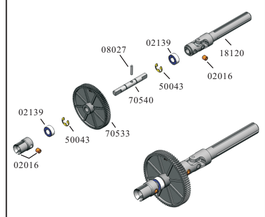

16.Motor Mounting

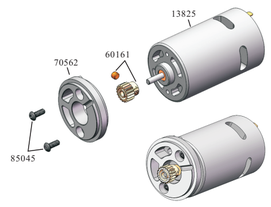

17.Motor Mount

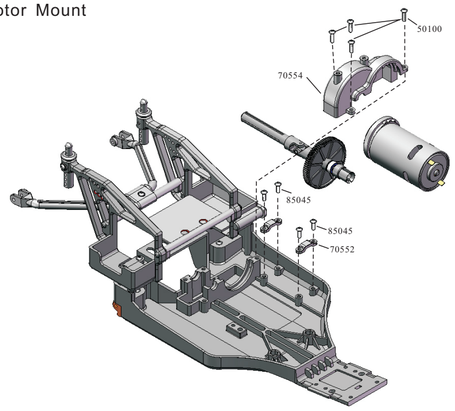

18.Front Partial

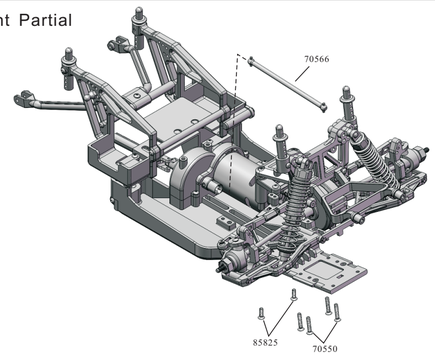

19.Rear Partial

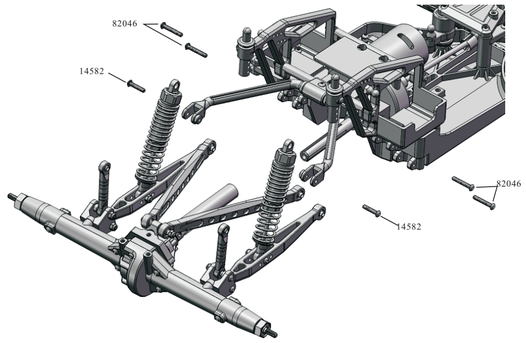

20.Servo

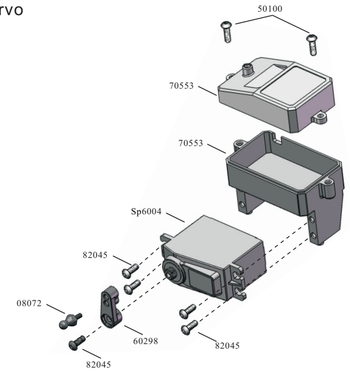

21.Eletronic Parts Mounting

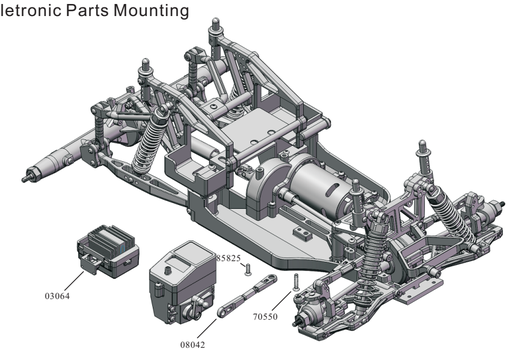

22.Front Bumper

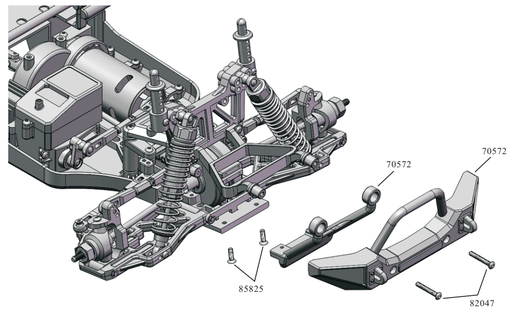

23.Wheels

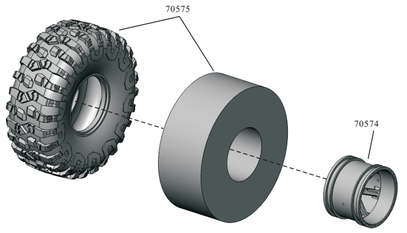

24.Battery Mounting

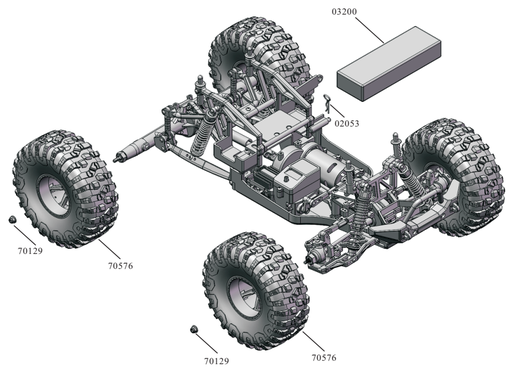

25.Operation Board

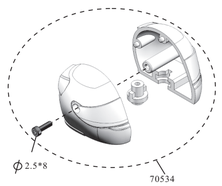

26.Body Mounting

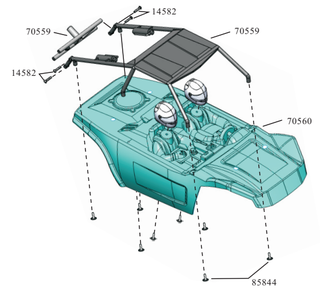
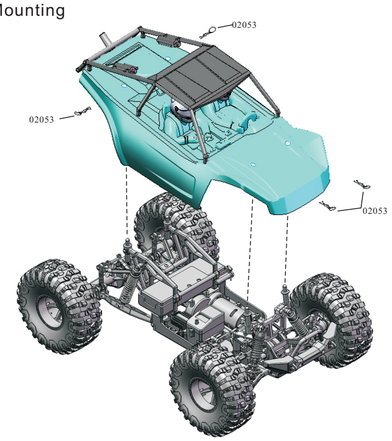
27.Body Mounting