Joni 16 Wall LED

DESCRIPTION
Joni 16 by Sean Lavin for Tech Lighting features a glowing integrated LED that sits against the backdrop of a simple elliptical reflector. Designed with a contemporary aesthetic, Joni 16 has heightened visual interest with two-tone finishes designed for both indoor and outdoor applications. Offered as Matte Black outer shade with a Matte White inner reflector, all Matte Black and all Aged Brass (indoor-only). Two popular sizes make Joni Wall Sconces great for any environment. Complete the look with the extended Joni Family by coordinating with the Flush Mount and Pendants. Lamping options are compatible with most dimmers. Refer to the Dimming Chart for more information. Includes 120-277 volt universal 12.2 watt, 737 delivered lumens, 3000K LED module. Dimmable with most LED compatible ELV, TRIAC and 0-10V dimmers. Mounts vertically or horizontally. Wall mount only.

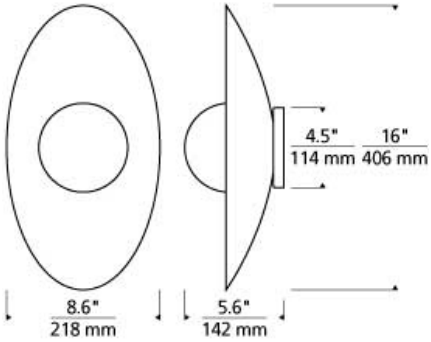

INSTALLATION
This product can mount to either a 4" square electrical box with round plaster ring or an octagonal electrical box (not included).

WEIGHT
2.0-2lb / 0.91-0.91kg ±

aged brass

aged brass side view

matte black/matte black

matte black/matte black side view

matte black/matte white

matte black/matte white side view

ORDERING INFORMATION

700WSJNI	LENGTH (A)	FINISH	LAMP
16	16"	**R** AGED BRASS **BB** MATTE BLACK / MATTE BLACK **BW** MATTE BLACK / MATTE WHITE	**-LED930** INTEGRATED LED 90 CRI 3000K 120V-277V UNV (T24)

TECH LIGHTING®

7400 Linder Avenue
Skokie, Illinois 60077

T 847.410.4400
F 847.410.4500

Tech Lighting, L.L.C.

700WS JNI ____ ____ ____

FIXTURE TYPE: _____

JOB NAME: _____

NOTES: _____

©2021 Tech Lighting, L.L.C. All Rights Reserved. The "Tech Lighting" graphic is a registered trademark of Tech Lighting, L.L.C.
Tech Lighting reserves the right to change specifications for product improvements without notification.