Battery Power Inverters

Renogy 500W | 1000W | 2000W
Pure Sine Wave Inverter Manual

RENOGY
THE FUTURE OF CLEAN ENERGY

2775 E. Philadelphia St., Ontario, CA 91761
1-800-330-8678

⚠ Important Safety Instructions ⚠

Please save these instructions.

This manual contains important safety, installation, and operating instructions for the inverter. The following symbols are used throughout the manual:

⚠ **WARNING: Indicates a potentially dangerous condition. Use extreme caution when performing this task.**

CAUTION: Indicates a critical procedure for safe and proper operation of the inverter.

NOTE: Indicates a procedure or function that is important to the safe and proper operation of the inverter.

General Safety Information

- Installation and wiring must comply with the Local and National Electric Codes (NEC) and must be done by a certified technician.
- Read all of the instructions and cautions in the manual before beginning the installation.
- There are no serviceable parts for this inverter. Do **NOT** disassemble or attempt to repair the inverter.
- Make sure all connections going into and from the inverter are tight. There may be sparks when making connections, therefore, make sure there are not flammable materials or gases near installation.

Inverter Safety

- The inverters are suitable for **12V Battery Banks ONLY.**
- **ALWAYS** make sure inverter is in OFF position and disconnect all AC and DC connecting when working on any circuit associated with the inverter.
- **NEVER** connect the AC output of the unit directly to an Electrical Breaker Panel/ Load Centre which is also fed from the utility power / generator.
- When connecting battery terminals, ensure the polarity of the battery connections is correct. Incorrect polarity may cause permanent damage to the unit.
- Be careful when touching bare terminals of capacitors as they may retain high lethal voltages even after power is removed.

Battery Safety

- Do **NOT** let the positive (+) and negative (-) terminals of the battery touch each other.
- Use only sealed lead-acid, flooded, or gel batteries which must be deep cycle.
- Explosive battery gases may be present while charging. Be certain there is enough ventilation to release the gases.
- Be careful when working with large lead acid batteries. Wear eye protection and have fresh water available in case there is contact with the battery acid.
- Over-charging and excessive gas precipitation may damage the battery plates and activate material shedding on them. Too high of an equalizing charge or too long of one may cause damage. Please carefully review the specific requirements of the battery used in the system.

Installation Safety

- The unit should be installed in a well-ventilated, cool, and dry environment. Make sure the fans of the unit and the ventilation holes are not blocked.
- Do not expose the unit to rain, moisture, snow, or liquids of any type.

Table of Contents

General Information 5
Included Components 6
Identification of Parts (AC Side) 7
Identification of Parts (DC Side) 9
Installation 10
- **Location Recommendations** 10
- **Sizing a Battery Bank** 11
- **Grounding** 12
- **DC Side Connection** 12

Operation 14
- **AC Side Operation** 14
- **USB Operation** 15

Inverter Indicators 15
Inverter Troubleshooting 16
External Fusing 18
Technical Specifications 19

General Information

The Renogy Pure Sine Wave Power Inverter delivers superior performance for remote off-grid applications. The inverter is of pure sine wave capable of producing cleaner, smoother, and more reliable electricity for a user's electronic needs.

Key Features

- Robust and sleek design
- Optimized for 12 VDC system voltage
- Special LED indicators for under-voltage or over-temp protection, over-voltage protection, over-load protection, and short circuit indication.
- A unique USB output port (5V, 2A max)

Pure Sine Wave

The Renogy Power Inverters output a pure sine wave similar to the waveform of the grid power. In a pure sine wave, the voltage rises and falls in a smooth fashion with very low harmonic distortion and cleaner utility-like power.

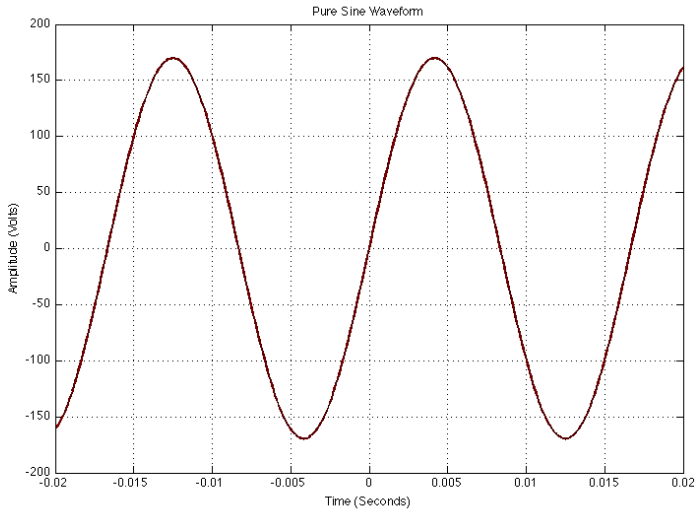

This gives users stable enough power to operate tools, fans, lights, computers, and other electronics without any interference. Pure sine wave inverters are in many cases more efficient, allowing users to use less energy and allow for more device capability. The main advantage to pure sine wave inverters is that they are used to operate sensitive electronic devices that require a high quality waveform with little harmonic distortion. Almost any electronic device could be powered using a pure sine wave inverter.

Included Components

The Renogy Pure Sine Wave Battery Inverters will be shipped with inverter cables.

Inverter Type	Cables	Gauge
RNG-500W	1 red inverter cable and 1 black inverter cable	10 AWG
RNG-1000W	1 red inverter cable and 1 black inverter cable	6 AWG
RNG-2000W	2 red inverter cable and 2 black inverter cable	6 AWG

Identification of Parts (AC Side)

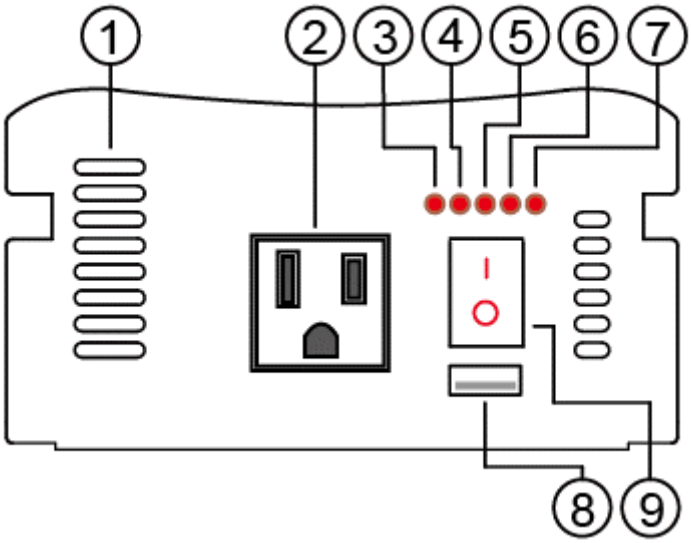

Figure 1: 500W Inverter

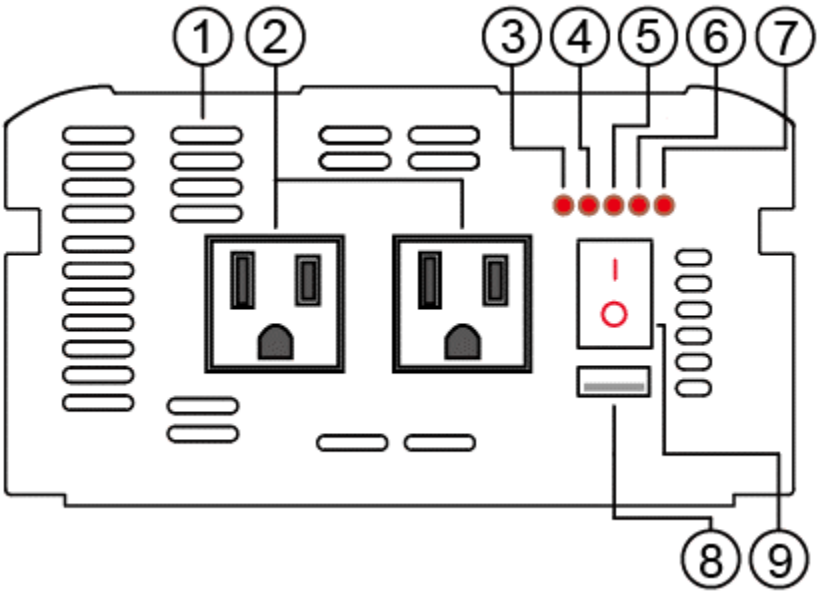

Figure 2: 1000W Inverter

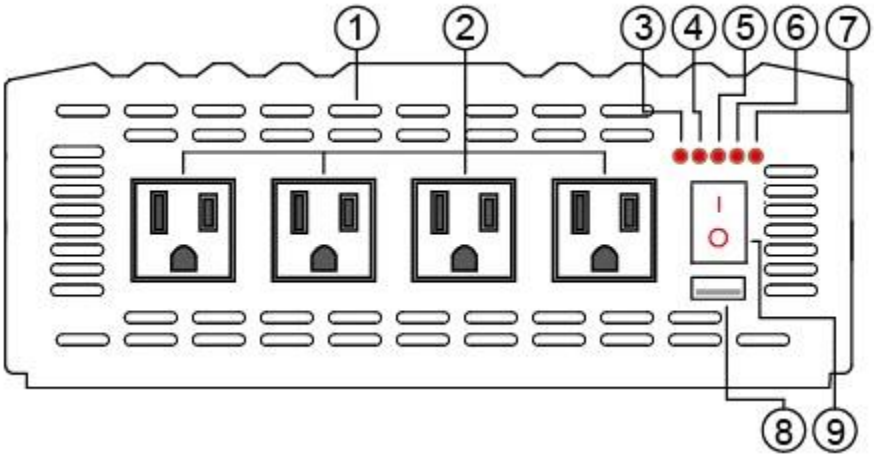

Figure 3: 2000W Inverter

Key Parts

1. **Ventilation Holes**
2. **AC Output socket(s)**
3. **Normal Work Indicator**
4. **over-heat / Low-voltage protection indicator**
5. **Over-voltage protection indicator**
6. **Over-load protection indicator**
7. **Short-circuit indicator**
8. **USB output port (5V, 2A)**
9. **Inverter Off/On Switch**

Identification of Parts (DC Side)

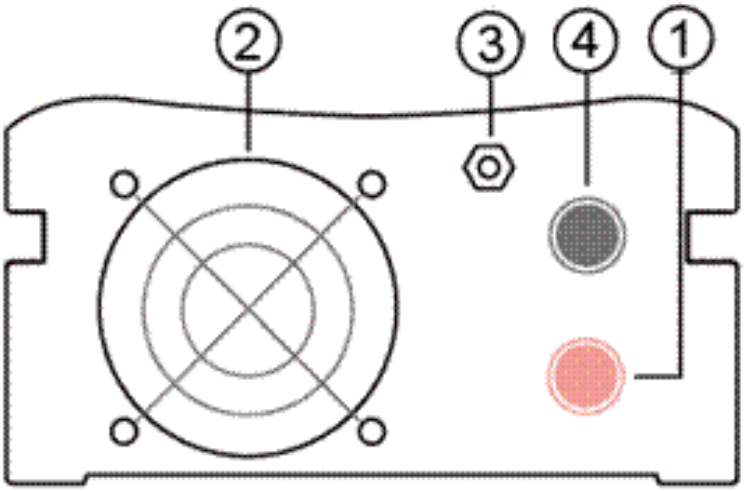

Figure 4: 500W Inverter

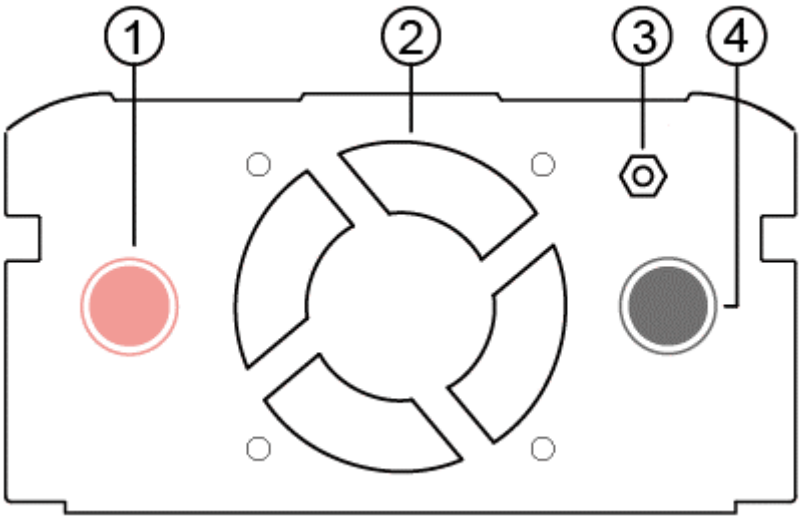

Figure 5: 1000W Inverter

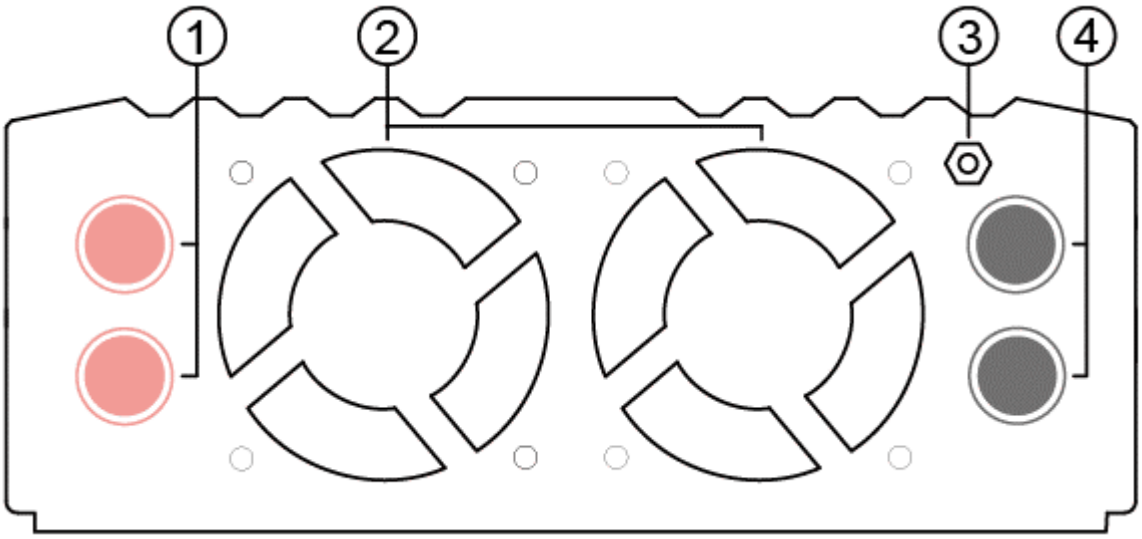

Figure 6: 2000W Inverter

Key Parts

1. **Positive Terminal Connection(s)**
2. **Ventilation Fan(s)**
3. **Grounding Bolt**
4. **Negative Terminal Connection(s)**

Installation

WARNING: Make sure inverter is in the off position before connecting anything.

CAUTION: Do not over-torque or over tighten the terminals. This could potentially damage the unit

CAUTION: Refer to the technical specifications for max wire sizes on the controller and for the maximum amperage going through wires.

Location Recommendations

WARNING: Never install the inverter in a sealed enclosure with flooded batteries. Gas can accumulate and there is a risk of explosion.

Ensure installation follows the following guidelines:

1. **Cool, dry, well-ventilated area—**Heat is the worst enemy for electronic equipment. Inverters must be in an area where the fans are not blocked or where they are not hit directly by the sun. They should be in an area free of any kind of moisture and allow for clearance of at least 10” around the unit to provide for adequate ventilation.
2. **Protection against fire hazard—**the unit should be away from any flammable material, liquids, or any other combustible material. The unit can spark and the consequences could be severe.
3. **Close proximity to battery bank—**prevent excessive voltage drop by keeping the unit close to the battery bank and having a properly sized wire going from the battery bank to the inverter.
4. WARNING: **Do not install the inverter in the same compartment as the battery bank because it could serve as a potential fire hazard.**
5. **Limiting electromagnetic interference (EMI)—**ensure the inverter is firmly grounded to a building, vehicle, or earth grounded. Keep the inverter away from EMI receptors such as TVs, radios, and other audio/visual electronics to prevent damage/interference to the equipment.
6. **Secure inverter—**the inverter could be stand alone or mounted using the outlying terminals on the inverter.

   WARNING: **The inverter should never be mounted vertically on a vertical surface since it would present a hazard for the fan opening which is crucial for cooling the inverter.**

Sizing a Battery Bank

1. **Determine the amount of Watts (Amps * Volts) for the load, and how long the load needs to operate—**each electrical appliance has a technical specifications indicating the watts, or the volts and amps required for operation.
2. **Estimate load run-time—**determining a battery size relies heavily on load watts and run-times. Most loads will not be constant, so estimations are key.
3. **Utilize the formula <u>Watts = Volts * Amps</u>**
4. **Determine Amps used for how many hours – Amp-hour (Ah)**

***For this Renogy inverter, the battery bank will be 12 volts direct current (12 VDC)**

Example	
A Microwave = 700 Watts 12V battery bank	700 Watts to run microwave using the batteries as if it was a 12VDC microwave requires 58 Amps 700 Watts / 12 Volts = 58 Amps

Load Operation = 3 hours	Now that amps have been determined, the amps hours need to be determined. The microwave will be used for approximately 3 hours a day. 58 Amps * 3 hours = **174 Ah**
At least a 174 Ah battery must be selected in order to use the 700 Watt microwave at 3 hours a day. However, determining a battery size is also dependent on the battery that is able to handle repeated discharge/charge cycles.	

NOTE: This is just an example. Actual quantities vary by battery capacity and rates of discharge.

NOTE: In the example above, the user would need to be using at least the Renogy 1000W Pure Sine Wave Inverter.

Grounding

The Renogy Pure Sine Wave inverters come equipped with a grounding lug for appropriate grounding to earth ground or to another designated ground (For example, a metal frame of an RV). The connections to ground must be tight and against bare metal. Whether using the inverter in a mobile application, such as an RV or in a building, grounding is highly recommended. The recommended wire size for grounding is 10 AWG insulated copper strand wire. For more information regarding grounding, users and/or installers must consult with the Local and National Electric Codes (NEC) for more specific grounding regulations and suggestions as they can change per scenario.

DC Side Connection

WARNING: The Renogy Pure Sine Wave Inverters are suitable for 12V battery bank systems ONLY. Not following the minimum DC requirement will cause irreversible damage to the unit.

CAUTION: Be careful of the positive and negative poles. Reversing the poles might cause permanent damage to the inverter. It will surely blow the internal fuse.

NOTE: Damage to the Renogy inverters due to reverse polarity is NOT covered by warranty.

The input terminals of the inverters have large capacitors connected to them. Once a positive and negative wire are connected to the terminals, it will complete the circuit, and commence drawing a heavy current momentarily. As a result, there may be a sparking occurring even if the inverter is in the off position. To minimize sparking, it is recommended that the user have the appropriate size wire feeding into the inverters and/or install an external fuse leading into the inverter.

NOTE: The RNG-2000W inverter will have 4 terminals (2 positive and 2 negative). This serves the purpose of splitting the potentially high amperages and protecting the wires.

NOTE: The 500W inverter is used as the example in the wiring schematics. The same principles apply to the 1000W and 2000W inverters.

1. **Flip inverter power to OFF position (on AC side)**

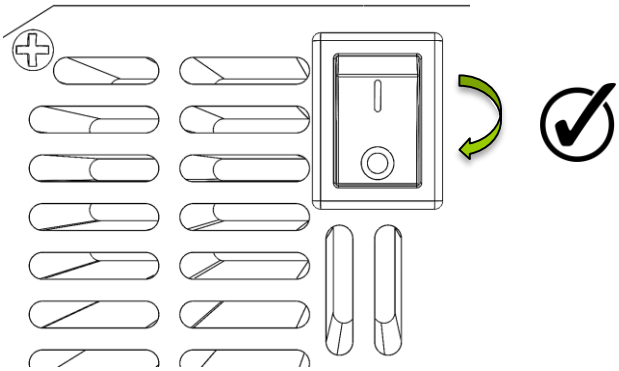

2. **Unscrew inverter terminals and connect battery connections. Then tighten.**

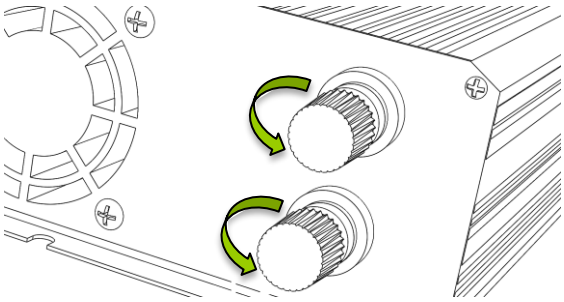

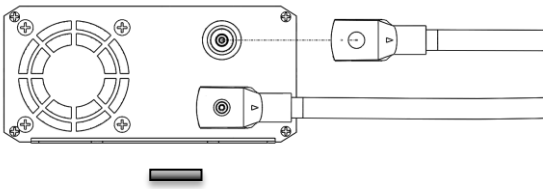

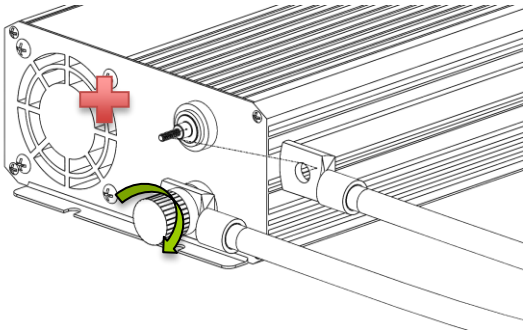

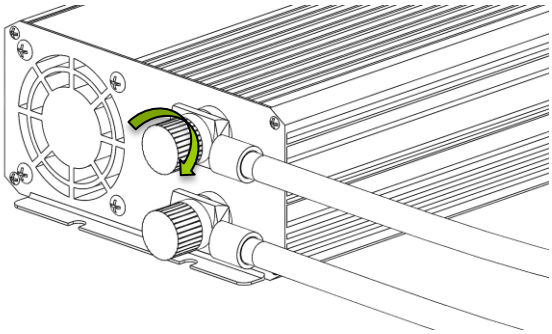

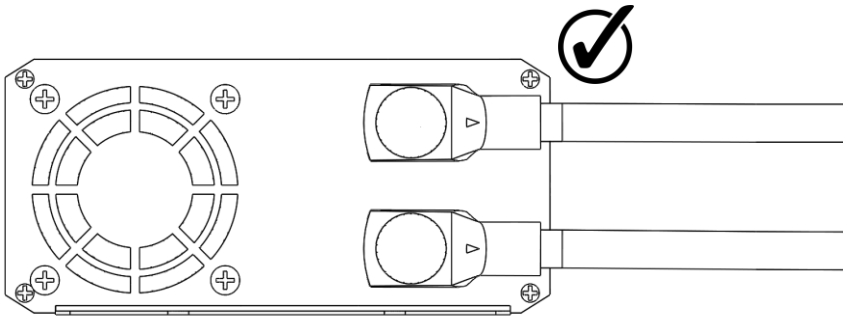

Operation

Assuming proper battery connection, the inverter is now ready for use.

AC Side Operation

1. **Connect electronic devices to electrical socket(s) on inverter. Flip inverter power to ON position (on AC side)**
   NOTE: The red "power" indicator will illuminate.

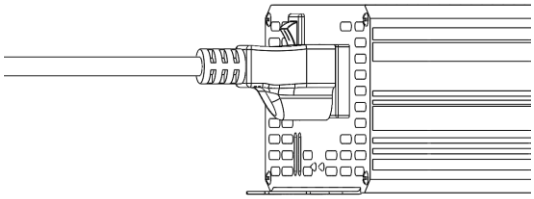

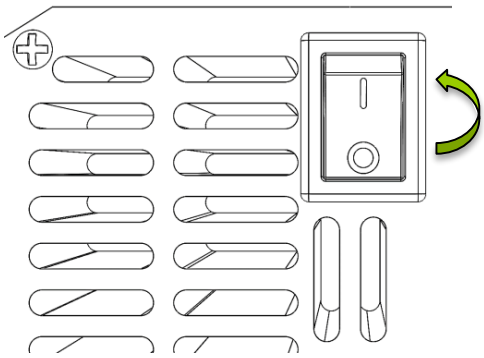

2. **When finished switch AC devices off FIRST, then turn off inverter switch.**

NOTE: The red "Over-heat / Low-voltage indicator will flash very quickly and the user will hear a quick beep when shutting down the inverter. This is normal behavior.

CAUTION: Avoid switching on the inverter with the load (electronic devices) already switched on. This may trigger an overload since some electronic devices have an initial high power surge to start.

CAUTION: When switching off the inverter, turn off the electronic devices first. Although the inverter is off, the capacitors will still have a charge, so the DC and AC terminals must be disconnected if altering the circuitry.

USB Operation

The Renogy inverters are equipped with a unique USB feature where the user is able to plug their USB devices for charging purposes. This feature is a simple "plug and play".
NOTE: USB operation is not compatible with the Apple Lightning Connector. Instead the AC plug with the Apple Adapter should be used.

Inverter Indicators

The Renogy inverters are equipped with red LED indicators to let the user know the status of the inverter. Some of the indicators may also involve a beeping sound coming from the inverter. They are as follows:

Indicator	Behavior
Normal Work	Indicates inverter is powered on and ready for use. If already in use, the fan(s) may start to operate depending on the load being drawn from the inverter.
Over Heat or Low Voltage Protection (AUDIBLE ALARM)	If the inverter is in an enclosed location where heat might concentrate, then the red indicator will turn on as well as an audible alarm sound. If the inverter is under load and detects that the batteries are low in voltage, it will also sound the alarm and turn on the red indicator.

Over Voltage Protection (AUDIBLE ALARM)	If the inverter detects the batteries are above 15V±0.5V at the input, then an alarm and red indicator will turn on.
Over Load Protection	If the load exceeds the specification of the inverter, then the inverter will be powered on for about 10-12 seconds before turning off all AC appliances and rendering the over-load LED indicator.
Short Circuit Indicator (AUDIBLE ALARM)	If the inverter experiences an internal short circuit, it will sound the alarm and turn on the red indicator.

Inverter Troubleshooting

Indicator	Troubleshoot
Under Voltage or Over Heat Protection	Use a multi-meter to check the voltage of the battery. Make sure the battery voltage is not below the rated specification of the inverter. The inverters have an input requirement of at least 11volts. Disconnect battery if necessary. Relocate inverter to cooler area if all else does not work.
Over Voltage Protection	Use a multi-meter to check the voltage of the battery. Make sure the battery voltage is not exceeding the rated specification of the inverter. The maximum input voltage should not be exceeding 15 volts.
Over Load protection	Turn off the inverter and check the rated specification for the electronic device(s). Be sure to check that the watts (volts * amps) does not exceed the specification for the

	inverter. Be very cautious if using power strips as they can be clear indicator for overload for inverters. Also, some electronic devices may require an initial high power surge start. Make sure all AC appliances are off before turning on the inverter's power switch.
Short Circuit	A short might occur down the DC line connecting to the inverter. Check the battery connections going to the inverter and ensure that there is continuity. In the event that there is an in-line fuse installed, check to make sure the fuse has not blown. Reset the inverter by turning it off for approximately 5 seconds and powering it back on.
Other Considerations	
Radio or television experience some interference.	Inverters contain internal switching devices that can generate electromagnetic interference (EMI). Though this cannot be entirely eliminated, it is recommended that inverters are properly grounded, and that they are located as far away from EMI receptors such as radios, televisions, and other audio/visual devices.
Battery cables are connected to the inverter but it does not power on.	The inverter needs a minimum of 11 volts to operate. Use a multi-meter to make sure the battery levels are suitable for operation. If all checks out, check the wire connections and inspect for any breaks or tears.
AC shuts down after some use	Users should be weary of the electronic devices they are powering on. Many electronics have an initial power surge that might trigger the inverter into overload and hence shutting down the operation. If this occurs, reduce the load and check the connections and power specifications. Reset the inverter by turning it off for about 20 seconds and powering it back on

Idle draw from inverter	When the inverter is switched on, the circuitry inside is activated. Even if there is no load on the AC side of the inverter, users will experience a small amount of current draw to keep the circuitry within the inverter ready to power. It is recommended to turn off the inverter when not in use.

External Fusing

Fusing is a recommended in PV systems to provide a safety measure for connections going from panel to controller and controller to battery. Remember to always use the recommended wire gauge size based on the PV system and the controller.

NEC Maximum Current for different Copper Wire Sizes									
#AWG	16	14	12	10	8	6	4	2	0
Max. Current	10A	15A	20A	30A	55A	75A	95A	130A	170A

Technical Specifications

Model	RNG-500W	RNG-1000W	RNG-2000W
Rated Power	500 W	1000 W	2000 W
Surge Power	1000 W	2000 W	4000 W
Rated Voltage	12 VDC		
Rated Voltage Range	11 V – 15 V		
Input Voltage	DC ≥ 10V ± 0.5V		
Over-Voltage Range	15V ± 0.5V		
Output Voltage	AC 110V ± 10%		
Output Frequency	60 Hz		
Self-Consumption	.52 A	1.2 A	1.7 A
Waveform	Pure Sine Wave		
USB outlet	5V, 2A		
Operation Temperature	-10°C → (+)50°C / 14°F → 122°F		
Dimensions	8.87 x 4.75 x 2.75 in 225 x 120 x 69 mm	11 x 5.5 x 2.87 in 279 x 139 x 72 mm	17.62 x 7.87 x 3.25 in 447 x 199 x 82 mm
Weight	3.50 lbs 1.58 kgs	5.65 lbs 2.56 kgs	12.85 lbs 5.82 kgs
AC Sockets	1	2	4

Updated: September 10, 2015