LL322B

JOB NAME: _____

DATE: _____

TYPE: _____

DESCRIPTION

Rugged die cast aluminum 6" diameter housings. Threaded, gasketed clear glass globe for durable weatherproofing and easy relamping. 1" long, 1/2" threaded nipple included for easy mounting. 75 watt max. Lamp not included.

SPECIFICATIONS

Globes:
Threaded, gasketed globe protects against weather, garden sprinklers and insects. Clear glass GL 100 globes standard for 4 Tier. Clear glass GL60 globes standard for 3 Tire. GL100 white globes also available for attractive appearance and glare reduction.

Housing:
Die cast aluminum housing with powder coat finish

Mounting Stem:
Accessory 12" mounting stem with 1/2" threads on both ends available

Socket:
Medium base porcelain with all copper electrical parts and 20" leads, including a ground lead.

UL Listing:
Suitable for wet locations. Suitable for mounting within 4 feet of the ground

Voltage:
120 volts AC

Lamps:
Incandescent lamp not supplied. Medium base A-19 lamps, 120V. 75 watt max.

Patents:
RAB sensor and fixture designs are protected under U.S. and International Intellectual Property laws.

Color:
Black

Weight:
2.1

DIMENSIONS

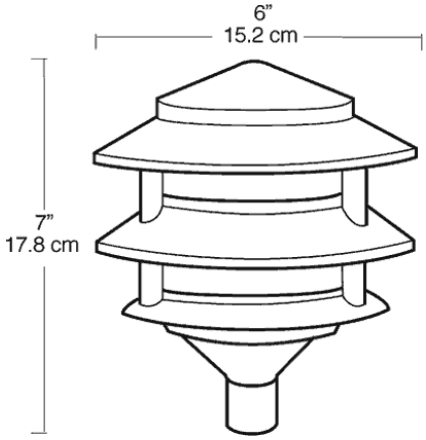

ORDERING INFORMATION

Total Watts	Lamp Type	Lamp Base	Ballast	Starting Amps/ Operating Amps 120V	208V	240V	277V	Input Watts	LAMP ANSI	Initial Lumens	Lamp Hours
75	A-19	Medium	0	0	0	0	0	0	0	1220	750

Factory Installed Options
Add suffix to Catalog Number

Note: Specifications may change without notice

RAB Lighting, Inc. • 170 Ludlow Ave• Northvale, NJ 07647 • Tel: 888 RAB-1000 • Fax: 888 RAB-1232 • www.rabweb.com
© 2007