dmfLIGHTING®

Catalog #		Type
Project		Date
Comments		

DHF13ICAT-E

6" Compact Fluorescent IC Airtight New Construction Housing

PRODUCT SPECIFICATION DATA

Description : 6" New Construction Energy efficient Compact Fluorescent recessed housing that provides significant ambient and reflected light. Single-wall new construction IC housing designed for direct contact with insulation. The Airtight feature prevents airflow, reducing heating and cooling cost.

Barhangers: The housing is equipped with pre-installed adjustable barhanger to locate the housing between joists with 16" to 24" space. With 4 nails specially designed to allow easy ceiling installation of the housing.

Junction Box: Pre-wired junction box provided with (7) ½" and (4) romex knock-outs with built-in strain relief to hold wire in place without any additional connectors. Junction box is equipped with grounding wire. Listed for through branch circuit.

Mounting Frame: 22 gauge die-formed galvanized steel mounting frame. Rough-in section (junction box, mounting frame, housing and bar hangers) fully assembled for ease of installation.

Housing: IC-Airtight housing 0.32" aluminum sealed housing is vertically adjustable (up to 1 ¾") which allows housing to be flush with ceiling.

Ballast: UL Listed and Class "P" Sound Rated "A" 120v to 277v High Power Factor American brand electronic compact fluorescent ballast with Auto-Reset Shutdown Circuit per NEMA Recommendations. Ballast is thermally protected against improper use of lamps and insulation. Light can be dimmed using dimmable electronic ballast. Specific dimming ballast must be specified. Check dimming manufacturer for compatible dimmer. Energy Star 120V dedicated ballast also available.

Lamp Holder: UL/CSA certified 13W 4-pin G24Q-1, GX24q-1 Base Compact Fluorescent Lamp Holder. Thermoplastic body material with Bottom Snap-in mounting type. Quick-Connect 18AWG Solid tinned.

Lamp: One 13W T4 G24q-1 or GX24q-1 pin base Compact Fluorescent Lamp designed for electronic ballast operation and are dimmable. With End-Of-Life (EOL) Protection.

Labels: UL/cUL listed for feed through and damp location. Meets State of California Title 24 requirements. Meets State of Washington Registered Air Flow requirements.

	Housing	Wattage	Type	Ballast	Trims	Trim Finish	Lens
EXAMPLE:	DHF	13	ICAT	E	D600	C	

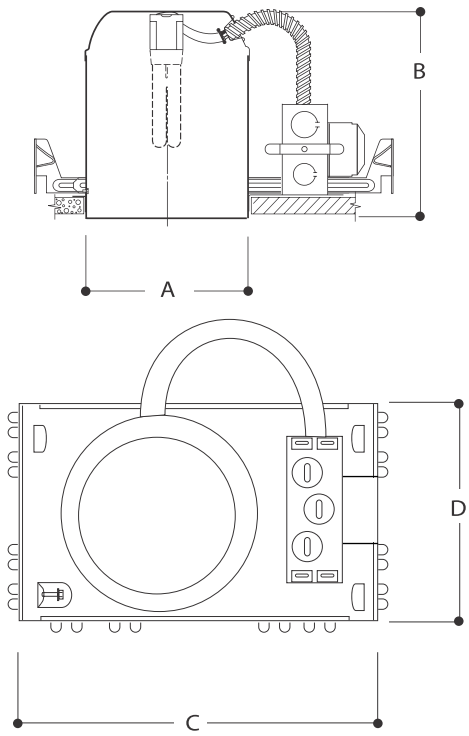

DIMENSIONS		CEILING CUT-OUT 6 ⅜"	
A:	6 ¼" (159mm)	C:	10 ¼" (260mm)
B:	7 ½" (190mm)	D:	7" (178mm)

Ballast Engineering Data:

1x13W	120V	277V
Total input power	18W	18W
Operating AMPS	0.94A	0.42A
Power factor	High	High
T.H.D	<15%	<15%
Min. starting temp.	-15˚C/+5˚F	-15˚C/+5˚F
Crest factor	<1.7	<1.7
Ballast factor	1	1
Sound Rating	A	A

ORDERING INFORMATION

Housing	Wattage	Type	Ballast	Trims	Trim Finish	*Lens
DHF - 6" Residential Vertical CFL IC Housing	13 : 1 x 13 (DTT & TRT) 18 : 1 x 18 (DTT & TRT) 126 : 1 x 26 (DTT & TRT) 132 : 1 x 32 (TRT Only) 126/32 : 1 x 26/32 (TRT Only) 213 : 2 x 13 (DTT) 218 : 2 x 18 (DTT)	ICAT : IC Airtight Housing	E : 120v/277v Electronic EM : Emergency Ballast DIM : Dimming Ballast (Universal Ballast) DLU : Lutron Dimming Ballast DM7 : Advance Mark 7 Dimming Ballast DMX : Advance Mark 10 Dimming Ballast 120 : 120V Electronic	D600 D621 D602 D622 D608 D626 D611 D629 D620 D630-AT-OR-UN D600-2 (2 Lamps) D602-2 (2 Lamps) D611-2 (2 Lamps)	C : Clear P : Pewter GW : Gold Wheat B : Black W : White WR : White Ring	Blank : Frosted F : Fresnel CL : Clear Lens SFR : Semi Frosted PRS : Prismatic