ET128B; ET128G ET128W

MR11 Cylinder

PROJECT INFORMATION:

Project Name: _____

Fixture Type: _____

Date: _____

DIMENSIONS

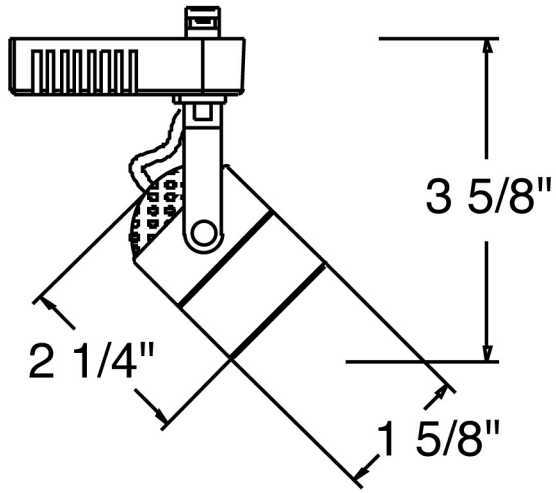

PRODUCT SPECIFICATIONS

All track heads except HID have adjustable track adapter to allow for use with single circuit and double circuit tracks.

- Mini Cylinder
- Metal Housing
- 90 degree vertical movement of 358 degree rotation
- Includes Transformer

Lamp: 35W MR11 12V

Transformer: Low Voltage Electronic (included)

Dimensions: Length: 2 1/4"
Diameter: 1 5/8"
Max. Extension: 3 5/8"

Finish: (B) Black, (G) Gold, (W) White

Labels: U.L. or E.T.L. listed

LAMP NOT INCLUDED

CATALOG NUMBER

Example: ET128B (Black)
ET128G (Gold)
ET128W (White)

2042 East Vernon Avenue, Vernon, CA 90058 • Tel: (323) 231-2600 Fax: (323) 231-3200 • www.elcolighting.com
© ELCO LIGHTING 2006 All Rights Reserved. Rev. Dec. 2006. ELCO Lighting reserves the right to make specification and design changes without notice.

ELCO LIGHTING