1

Flat Track Sliding System with Top-mounted Hanger
Model # BD110

- Maximum panel weight: 100 kg (220 lbs.)
- Maximum panel height: 2743 mm (108")
- Door thickness 35 – 45 mm (1 3/8" – 1 3/4")
- For panel width up to 1220 mm (48")
- For 1 sliding wood door

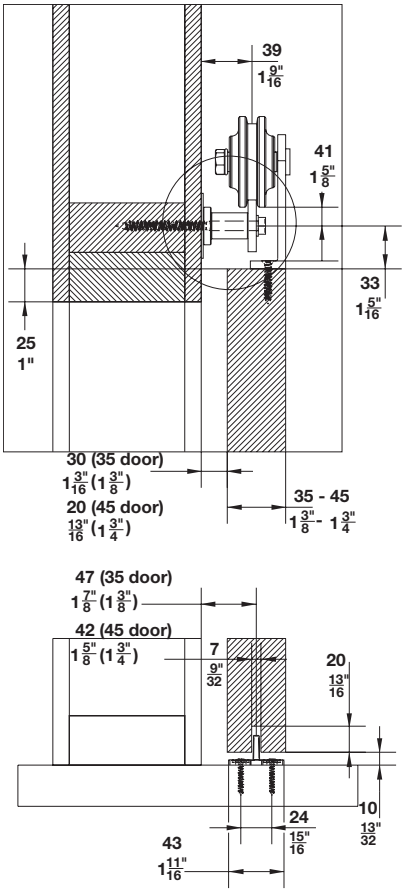

Dimensions in mm
Inches are approximate

Dimensional data not binding. We reserve the right to alter specifications without notice.

Flat Track Sliding System with Top-mounted Hanger Set
Model # BD110

- For 1 sliding wood door

	Material	Finish	Track length	Item No.
	Steel	black	2 m (6’ 6 3/4”)	941.32.007
			2.5 m (8’ 2 7/16”)	941.32.008
	Steel	brown	2 m (6’ 6 3/4”)	941.32.009
			2.5 m (8’ 2 7/16”)	941.32.010

Set Components

	Description	Material	Finish	Track length	Item No.
	Top-mounted hanger BD110	Steel	black	–	941.32.102
			brown		941.32.103
	Upper running track	Steel	black	2 m (6’ 6 3/4”)	941.32.602
				2.5 m (8’ 2 7/16”)	941.32.603
			brown	2 m (6’ 6 3/4”)	941.32.612
				2.5 m (8’ 2 7/16”)	941.32.613
	Track stopper (1 left and 1 right)	Zinc die-cast	black	–	941.32.300
			brown		941.32.301
	Wall attachment with mounting hardware	Steel	black	–	941.32.400
			brown		941.32.401
	Anti-derail block	Plastic	black	–	941.32.302
	Floor guide	Plastic	black	–	941.32.200
	Hexagon key	Steel	galvanized	–	941.32.403
	Drill bit	Steel	–	–	941.32.402

Accessories

	Description	Material	Finish	Capacity		Item No.
	Smuso AD Soft Close for Flat Track Sliding Systems	Housing: Steel	black powder-coated	40kg. (88 lbs.)	RH	941.32.016
					LH	941.32.015
				80 kg (176 lbs.)	RH	941.32.018
					LH	941.32.017
				100 kg (200 lbs.)	RH	941.32.020
					LH	941.32.019
	Splice Kit, to combine 2 upper tracks	Steel	black powder-coated			941.32.405
	Splice Kit, to combine 2 upper tracks	Steel	brown powder-coated			941.32.406

Dimensional data not binding. We reserve the right to alter specifications without notice.

Dimensions in mm
Inches are approximate