Automatic Door Bolt

- Locks double panel doors without additional stop strips or furniture bolts
- The door catch is mounted inside the cabinet
- The hook and wedge element are mounted to the inside of either the right or left door
- The door with the hook element must be closed first
- Upon closing the second door, the wedge element automatically blocks the door catch
- The door with the wedge element must now be made lockable with a lock

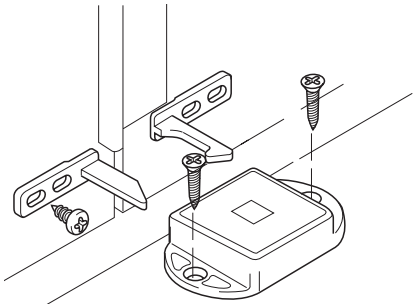

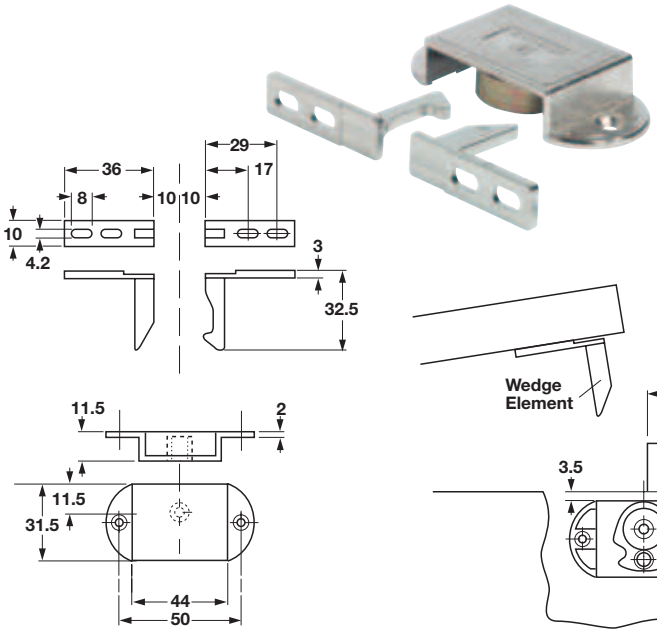

Flat Head #5

- Must be combined with either a cam or deadbolt lock
- Functions best when chosen lock locks into the cabinet top or bottom
- Make sure that doors lock tight without too much 'play' and that tall doors do not offer too much flex

Material: Zinc, die-cast

Finish	Item No.
nickel-plated	245.58.754

Note
Minimum door width is 406 mm (16").

Double Door Latch

- No need to reach inside cabinet to release elbow catch
- Doors can be closed in any order
- Low profile latch mechanism reduces product footprint inside cabinet
- Requires use of a single lock (sold separately)
- Allows two or three point locking for standard or wardrobe style double door cabinets when used with a lock
- Eliminates the need for an elbow catch, or other devices, and allows hardware to be installed out of the way

Note
For cabinets taller than 1219 mm (48") it is recommended to use both top and bottom mount latches. For locking a pair of doors with one lock (not included).

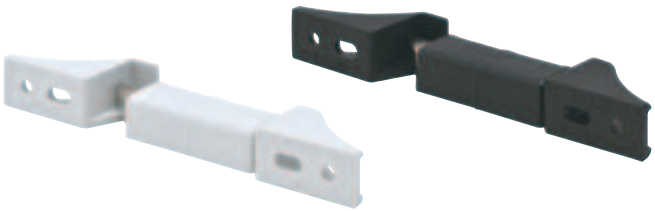

Flat head screws pages 11.132-11.133, 11.135

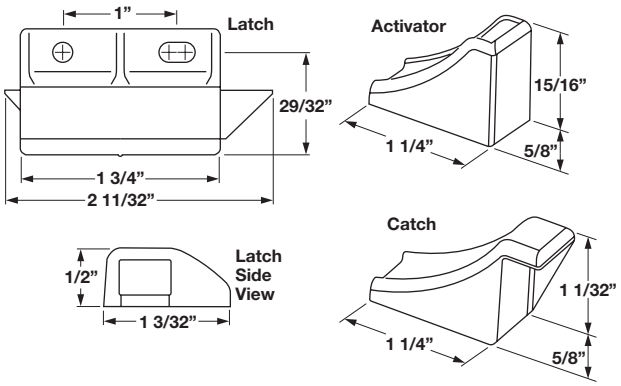

- Easy to install and use
- Exceeds pull force above 150 lbs.

Material: Plastic

Color	Handing	Item No.
black	RH	245.58.300
black	LH	245.58.301
white	RH	245.58.700
white	LH	245.58.701

Supplied With
Latch
Activator
Catch
Mounting instruction

Dimensions in mm
Inches are approximate

Dimensional data not binding. We reserve the right to alter specifications without notice.