Häfele Keku System

- For fastening panels to frames
- Temperature range: -100ºC (-148°F) to +135ºC (+275°F)
- Do not treat with chemical solutions or aggressive greases
- Do not adjust by hammering
- Not for suspended loads such as ceiling panels

Flat Head #8 | VARIANTA ⌀3 | VARIANTA ⌀5

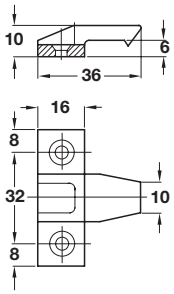

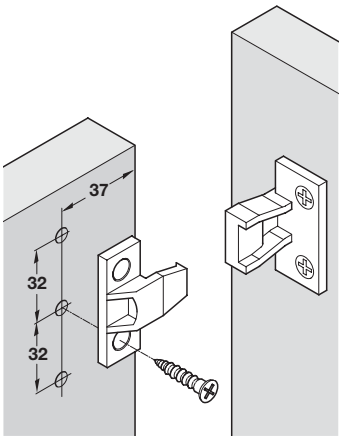

AS Frame Component

Material: Plastic

Mounting	White	Black
wood screws	262.50.740	262.50.368
varianta screws	-	262.50.377

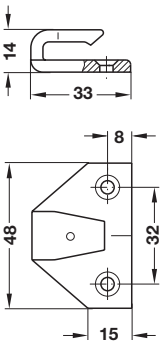

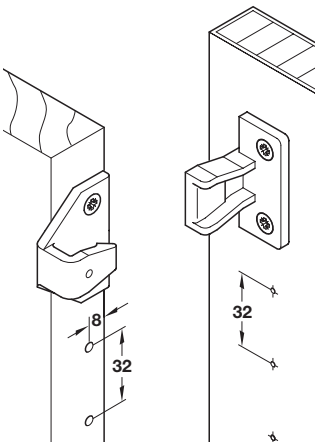

ASR Frame Component

Material: Plastic; Color: black

Mounting	Item No.
wood screws	262.50.390
varianta screws	262.50.391

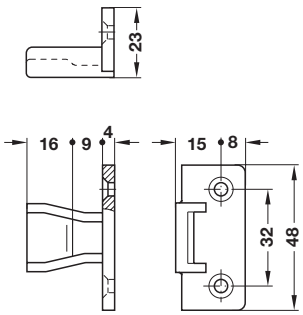

AS Panel Component

Material: Plastic

Mounting	White	Black
wood screws	262.50.730	262.50.359
varianta screws		262.50.358

Note
ASR and AS components must be ordered separately.

Varianta screws	page 11.142
Flat head screws	pages 11.132-11.133, 11.135

Dimensional data not binding. We reserve the right to alter specifications without notice.

Dimensions in mm
Inches are approximate