Monitor Suspension System

- Low voltage motor lifts and lowers flat screen monitor in top surface providing a safe, secure, and ergonomic solution for any working environment.
- Fits most flat panel displays up to 21" diagonal or 20" widescreen
- Retractable access doors open and close automatically
- Allows for additional work space when not in use
- Hides confidential information when necessary
- Reduces risk of damage to PC equipment
- Removes monitor from line-of-sight in the submerged position
- Max. dimensions for flat screen monitor (W x D x H): 470 x 356 x 70 mm (18 1/2" x 14" x 2 3/4")
- Weight of flat screen monitor cannot exceed 21 lbs. (9.5 kg)

Trolley E-Class

- Minimum work surface depth: 610 mm (24")
Keyboard width: 711 mm (28")

Material: Steel, epoxy powder-coated; Trim Grommet: Plastic

Color	Item No.
black	639.93.010

Supplied With
Keyboard tray with locking slides
Removable metal front cover
Trim grommet
VESA mounting plates: 75 and 100 mm (3" and 4")
Mounting hardware
Instructions

Note
Detailed cut-out dimensions and mounting instructions are included with each set.

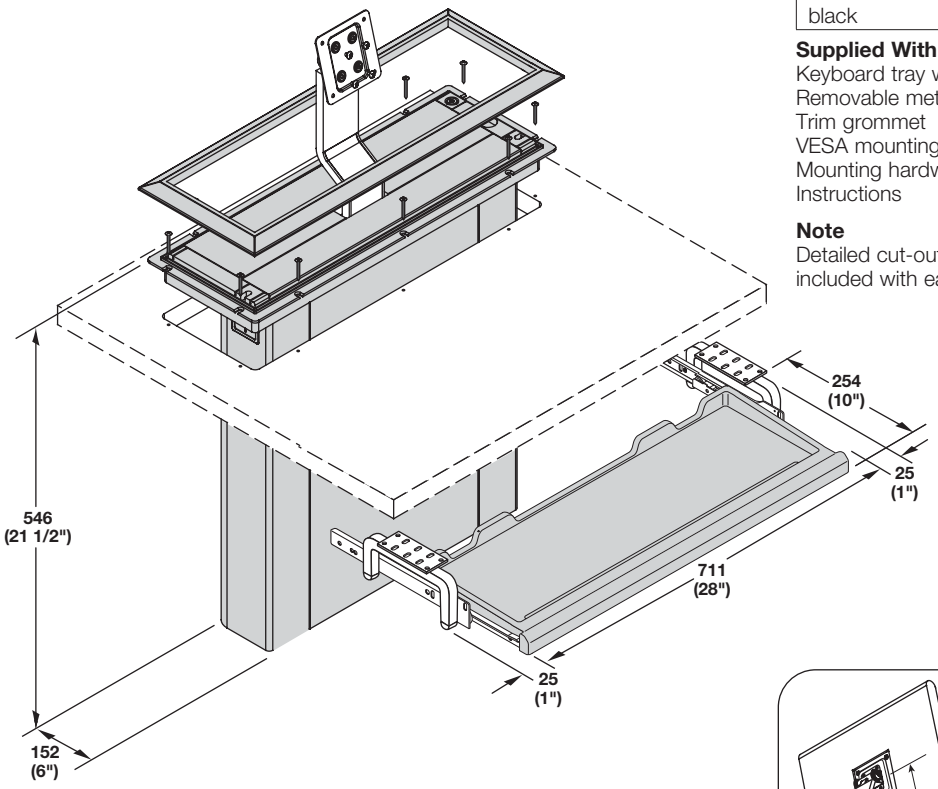

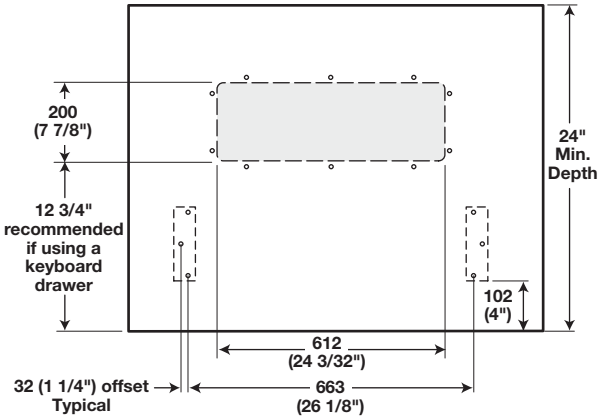

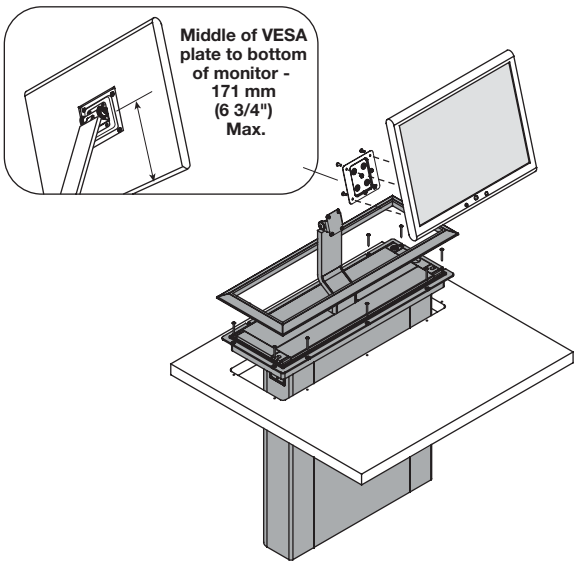

Dimensions in mm
Inches are approximate

Dimensional data not binding. We reserve the right to alter specifications without notice.

Monitor Suspension System

- Keyboard allows for a mouse to be used next to keyboard
- The same technology as the standard systems but designed to accept flat screen computer monitors
- Designed to fit monitors with max. dimension: 467 x 432 mm (18 3/8" x 17")

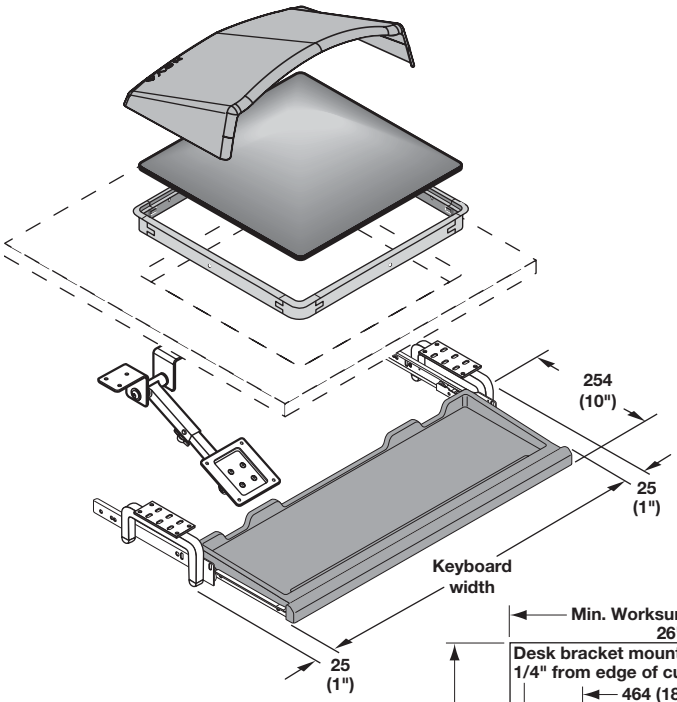

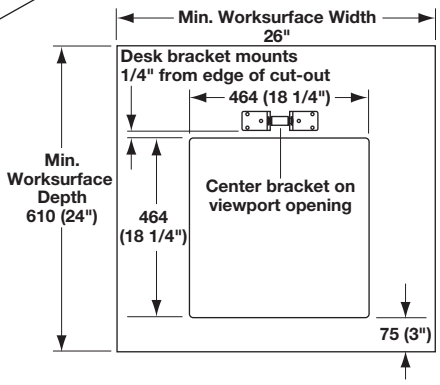

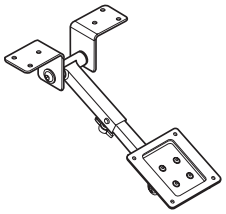

Flat Panel Display Arm

- Mounts underneath worksurface to support flat screen monitor on a tension-mounted arm
- Converts existing downview CRT monitor system to flat screen creating space below the worksurface
- Monitor attaches to flat panel arm with VESA compliant steel plate 100 mm (4")
- Weight capacity for monitor: 95 kg (21 lbs.)
- Arm length adjusts from 133 - 214 mm (5 1/4" - 8 7/16")

Material: Steel

Color	Item No.
black	639.91.378

System for Flat Screen Monitors

- Minimum work surface depth: 610 mm (24")
- Weight capacity for monitor: 9.5 kg (21 lbs.)

Keyboard width: 711 mm (28")

Material: Steel, epoxy powder-coated
Glass, tinted and tempered
Glare Shield, Trim Grommet: Plastic; Color: black

Keyboard tray width	Item No.
610 (24")	639.90.390
711 (28")	639.90.396

Supplied With
Flat panel arm
Keyboard tray with locking slides
Tinted and tempered glass (1/4" thick) viewing surface
Glare shield
Trim grommet
100 mm (4") VESA mounting plate
Mounting instructions

Note
Detailed cut-out dimensions and mounting instructions are included with each set.

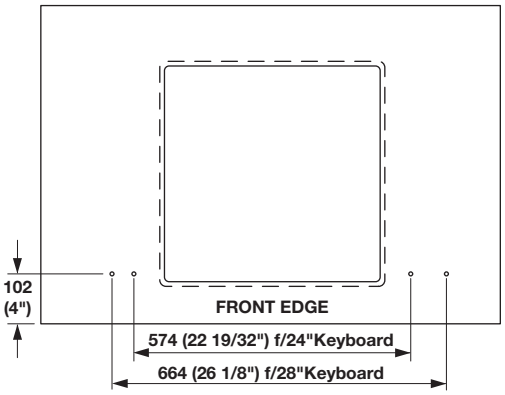

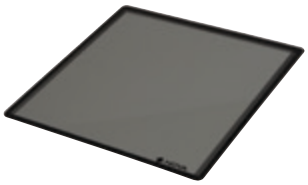

Replacement Glass Viewport

- Tinted and tempered (standard)

W x D x H: 457 x 457 x 6 mm (18" x 18" x 1/4")

Item No.
639.91.300

Note
Standard kits come complete with a viewport which is tinted (T141 rating) and tempered.

Replacement Trim Grommet

W x D x H: 457 x 457 x 6 mm (18" x 18" x 1/4")

Material: Plastic

Color	Item No.
black	639.91.350

Dimensions in mm
Inches are approximate

Dimensional data not binding. We reserve the right to alter specifications without notice.