Grass Zargen Drawer System

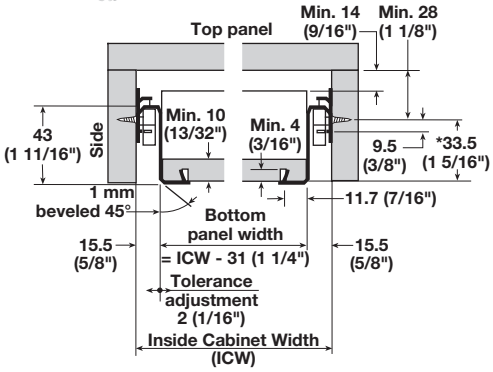

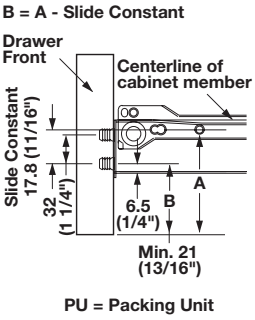

6035

Side Height: 43 mm (1 11/16")

Material: Steel; Finish: white

Length	Item No.
270 (10 5/8")	558.26.827
350 (13 3/4")	558.26.835
400 (15 3/4")	558.26.840
440 (17 3/8")	558.26.844
470 (18 1/2")	558.26.847
510 (20 1/16")	558.26.851
550 (21 5/8")	558.26.855

Supplied With
10 sets

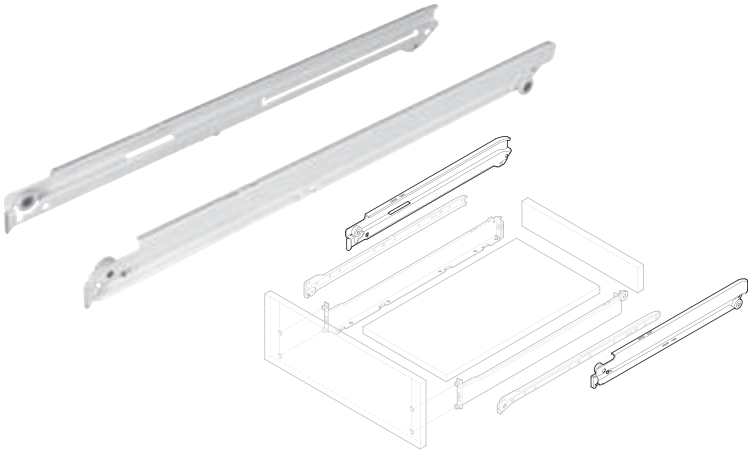

6200 - Full Extension Member

- Designed for use with Systems 6035, and 6036, 6026, 6136, 6236, and 6436
- Provides full extension of drawer shelves and pull-outs
- Inserts easily between the cabinet and drawer member
- Made in the USA

Material: Steel; Finish: white

Length	Item No.
270 (10 5/8")	558.19.719
350 (13 3/4")	558.19.700
400 (15 3/4")	558.19.728
440 (17 3/8")	558.19.737
470 (18 1/2")	558.19.746
510 (20 1/16")	558.19.755
550 (21 5/8")	558.19.764

Supplied With
10 sets

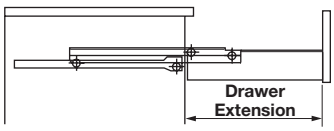

6200 Member Installation:

1. Attach clip to left cabinet member to prevent full extension member from slipping.
2. Mount cabinet member of the drawer slide according to installation measurements.
3. Install full extension slide member by simple insertion.
4. Insert drawer, pull-out or shelf.

Slide Length	Drawer Extension	
	Single Stop	Double Stop
270 (10 5/8")	275 (10 13/16")	-
350 (13 3/4")	355 (14")	-
400 (15 3/4")	405 (15 15/16")	419 (16 3/8")
440 (17 3/8")	445 (17 1/2")	459 (18 1/16")
470 (18 1/2")	475 (18 11/16")	489 (19 1/4")
510 (20 1/16")	515 (20 1/4")	529 (20 13/16")
550 (21 5/8")	555 (21 7/8")	569 (22 3/8")

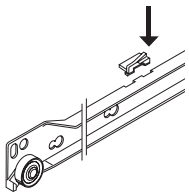

Spare Guide Clip

Material: Steel

Finish	Item No.
white	558.19.291

Dimensional data not binding. We reserve the right to alter specifications without notice.

Dimensions in mm
Inches are approximate