Full Extension

Weight capacity: 125 kg (275 lbs.)
- Includes Soft Close mechanism
- Quiet movement, even under the heaviest loads
- No deflection in fully extended position
- Top slide provides lateral stability
- Horizontal and vertical adjustment
- Rear stop

Maximum height: 829 mm (72")
Maximum width: 457 mm (18")
Side length: 575 mm (22 5/8")

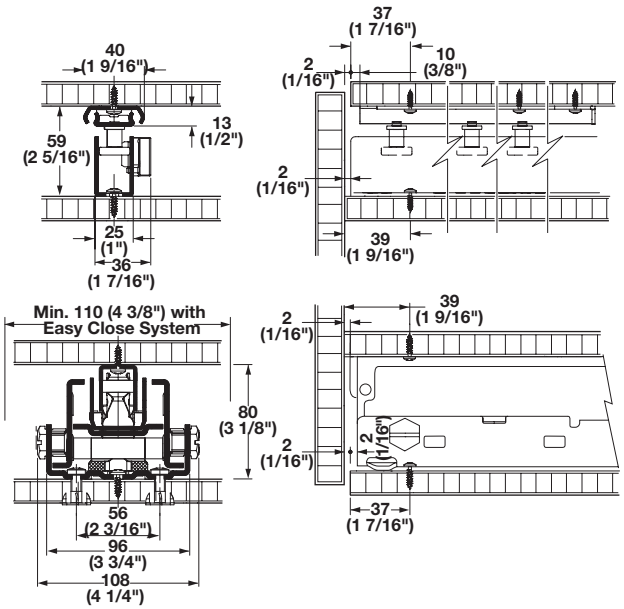

soft&silent

Top/Bottom Mounted

Material: Slides: Steel; Rollers: Delrin

Finish	Item No.
silver powder-coated	421.46.958

8

Dimensional data not binding. We reserve the right to alter specifications without notice.

Dimensions in mm
Inches are approximate