ASSEMBLY INSTRUCTIONS

VISTA ARBOR

REVIEW ALL STEPS BEFORE STARTING ASSEMBLY

HARDWARE LIST

			Quantity
A	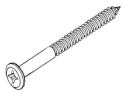	1" Screw	(16)
B	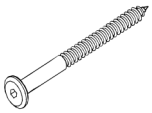	3" Screw	(8)
C		Stake kit	(1)

PARTS LIST

1. Gable
2. Side Panel
3. Canopy

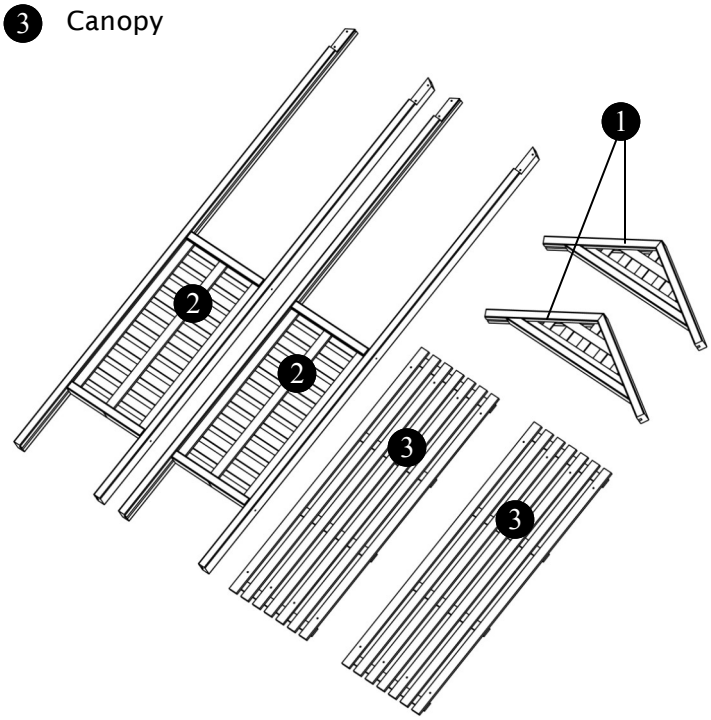

TOOLS REQUIRED

- Power screwdriver or drill
- Tape measure
- Concrete mix, 2 - 60 lb bags

Handy to have:

- Level

PRELIMINARIES

NOTE: This arbor requires staking in concrete or a similarly secure medium. See page 4 for instructions. Choosing not to secure the arbor may compromise the structure's integrity.

Selecting a Work Area

Select an area close to where the arbor will be installed. The assembly area should be relatively flat and open, at least 8'x6'. A lawn, driveway or wide path will be satisfactory. It is a good idea to lay out the arbor box on your work surface to protect the arbor from nicks and scratches. Two people are recommended to complete the assembly process. Always use caution when assembling or moving the arbor.

Optional Painting or Staining

If you wish to stain or paint your arbor, we recommend applying to individual components before assembly to ensure fullest coverage. Use a high quality exterior stain or paint. Be careful not to cover up pencil marks.

ASSEMBLED PRODUCT

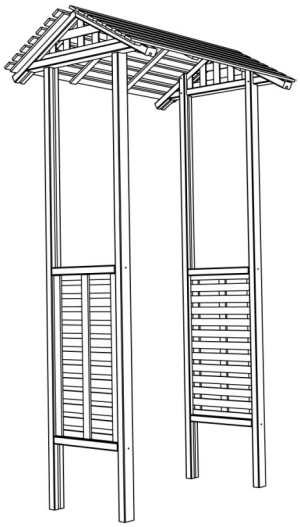

Win FREE Arboria Products

Give us feedback about this Arboria product and be entered into a drawing to win Arboria goods. It's easy, go to www.Arboria.com, choose a product then click on the link to **review**. Be sure to enter your email and telephone so that we may contact you if you win. **Upload a photograph for an extra chance to win.** Visit www.Arboria.com for official rules. No purchase necessary.

Arboria is a division of LWO Corp. / PO Box 17125 / Portland, OR / Cust. Serv. 800-459-8718 / Fax 503-286-4092 / www.arboria.com

ASSEMBLY INSTRUCTIONS

VISTA ARBOR

STEP 1 Align side panel posts with pencil marks on inside of gable.
Ensure post notches are flush and tight with bottom of gable. Fasten in place.

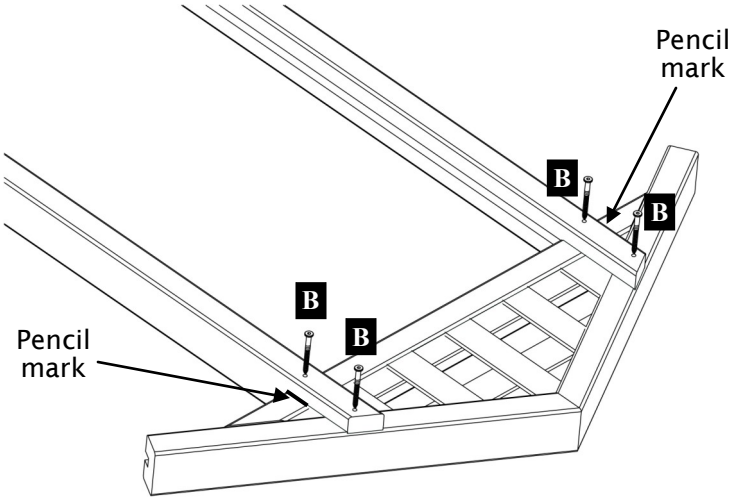

Repeat Step 1, fastening second side panel to second gable.

STEP 2 Position side panel on edge with the heads of screws installed in step 1 facing inward.

Place canopy on top of gables. The vertical wood slat on the underside edge of the canopy must be on the outside of the gable and flush with edge of the gable.

Align lower edge of the canopy with the pencil marks on the edge of the gable. Fasten canopy to the gable by driving screws through every other slat.

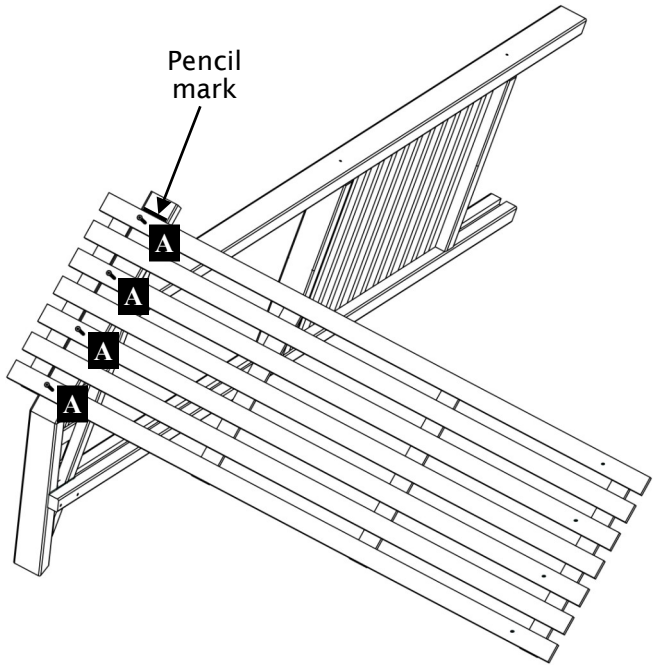

Arboria is a division of LWO Corp. / PO Box 17125 / Portland, OR / Cust. Serv. 800-459-8718 / Fax 503-286-4092 / www.arboria.com

ASSEMBLY INSTRUCTIONS

VISTA ARBOR

STEP 3 Position second side panel under canopy. When flush and aligned with pencil mark fasten every other slat.

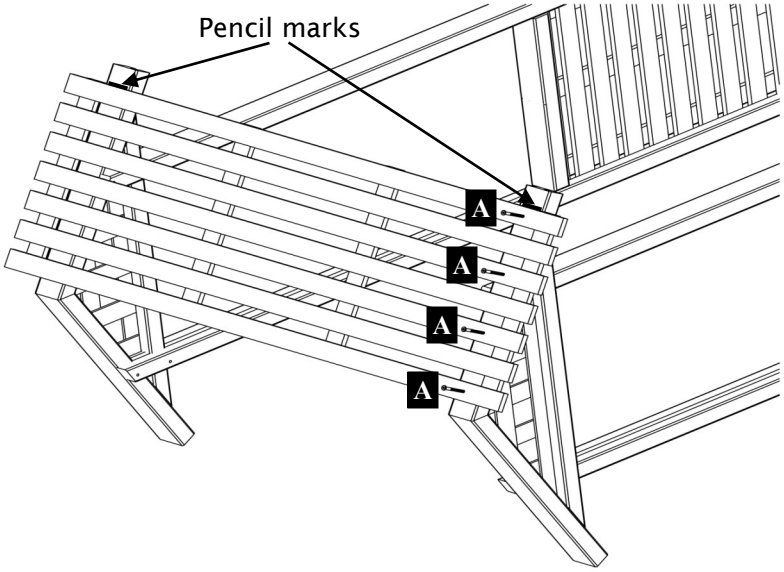

STEP 4 Align second canopy with pencil marks on gable ends and fasten remaining **A** screws through every other slat into each gable.

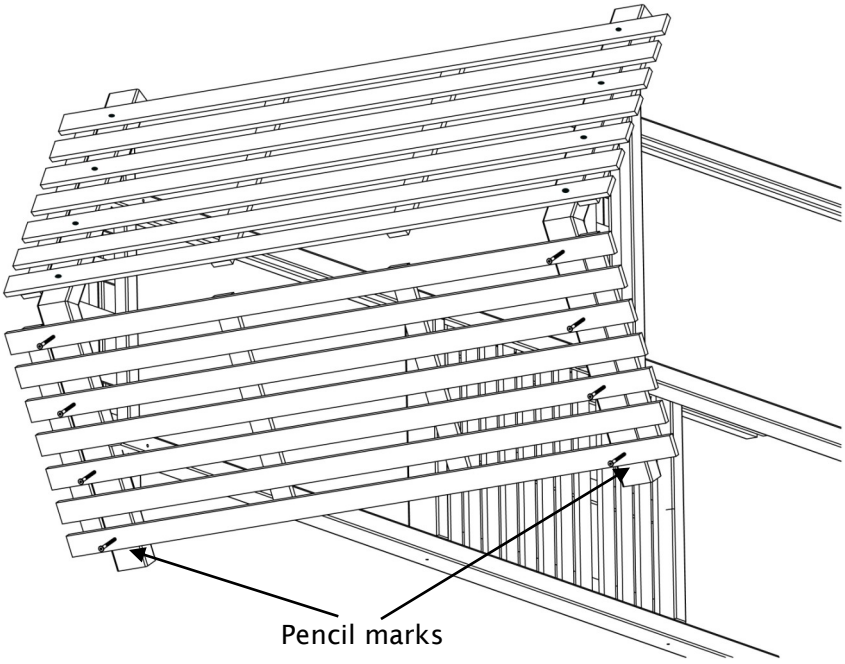

STEP 5 Cautiously raise the arbor to a standing position.
Your arbor is now assembled. Follow directions on next page to anchor your arbor.

Arboria is a division of LWO Corp. / PO Box 17125 / Portland, OR / Cust. Serv. 800-459-8718 / Fax 503-286-4092 / www.arboria.com

ASSEMBLY INSTRUCTIONS

VISTA ARBOR

ANCHORING THE ARBOR

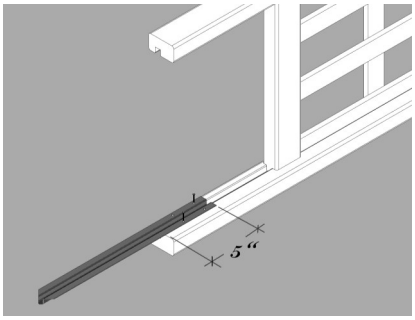

This arbor may be secured using a variety of techniques. These include attaching to an existing structure or anchoring with gravel or river rock instead of concrete. The instructions below represent secure mounting with concrete. Use caution when moving the arbor to its final placement. Two people are recommended to move the arbor.

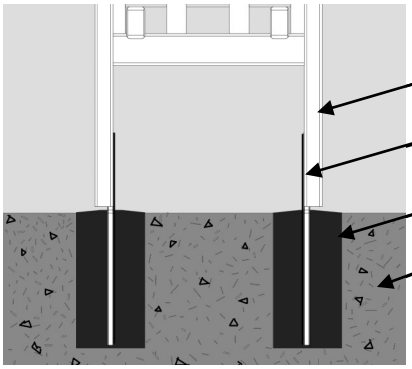

1. Attach all four anchors to the bottom of the arbor using the provided screws, two screws per anchor, staggering the screws.
2. Measure the distance in between all anchors and dig four 8" diameter holes to accommodate the anchors.
3. Carefully lift the arbor and position in place, avoid tilting the arbor on the anchors.
4. Plumb and level the arbor.
5. Mix concrete according to the manufacturer's instructions, fill each hole within 1/4" of the bottom of each post, posts should not be set in the concrete.

ENVIRONMENT

Congratulations, this Arboria garden structure is crafted from natural and chemical-free wood. Wood, as a building component, is recognized by the USDA[1] as yielding fewer greenhouse gases than other common materials. The use of wood provides substantial environmental benefits when compared to oil-based plastics. Using natural, untreated wood in your garden is not only the beautiful choice, but it reduces the exposure of plants, people and animals to potentially harmful chemicals. You can trust the Arboria name for environmentally conscious, exceptional outdoor products.

[1]*USDA.com Release No. 0426.11*

ABOUT YOUR PRODUCT

This Arboria garden structure is made from natural and untreated Western Red Cedar, a species that is known for its natural resistance to pests and decay. This product features furniture-style craftsmanship to ensure strength and durability over the years to come. Like all wood products subjected to weather, small hairline cracks may develop. These should in no way impair the strength and usefulness of the furniture.

CARE AND MAINTENANCE

If left unstained, your Arboria garden structure will silver within a year or two of exposure to the elements. Silvering is a natural occurrence and is often considered a desirable look. The overall integrity of your garden structure is not compromised during this process. The inherent rot and pest resistance of the wood will provide a degree of protection and help your garden structure to endure over the years.

If you wish to further protect your structure from the long-term effects of aging or to stabilize the color/finish of your product, we recommend applying a quality water or oil-based finish. Best results can be achieved by using Penofin (www.penofin.com, 1.800.PENOFIN) as per manufacturer's instructions. If you desire to paint your product, we recommend a quality oil or acrylic primer coat prior to applying the final coat(s). Be sure to allow sufficient time for your product to dry. Avoid applying finish to any metal or non-wood parts, as well as any sections of your product which have a factory applied color stain.

Arboria is a division of LWO Corp. / PO Box 17125 / Portland, OR / Cust. Serv. 800-459-8718 / Fax 503-286-4092 / www.arboria.com