Assembly Directions for
Classic Terrace Swivel Rocker

#CTSR3034

PACKAGE CONTENTS	
1	Chair
1	Base
1	Swivel Mechanism
3	Fiberglass Springs
2	Aluminum Plates
1	Hardware Package

HARDWARE PACKAGE	
6	5⁄16" x 1¾ Hex Bolts
6	5⁄16" x 1¼" Hex Bolts
6	5⁄16" Flange Nuts
6	5⁄16" Square Nuts
6	5⁄16" Lock Washers

TOOLS NEEDED:
½" Wrench

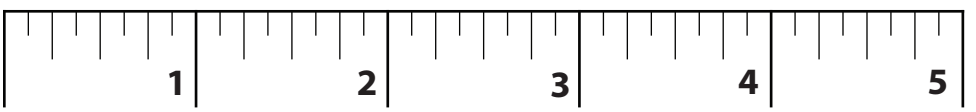

Use to measure bolts

STEP #1 - Fasten the 3- Fiberglass Springs and Aluminum Plates to the frame using 6- 5⁄16" x 1¾" Hex Bolts and Flange Nuts, with the Springs pointing toward the front of the Chair. **(Please note: Only hand-tighten the Flange Nuts until all six Bolts are installed, then align springs and fully tighten.)**

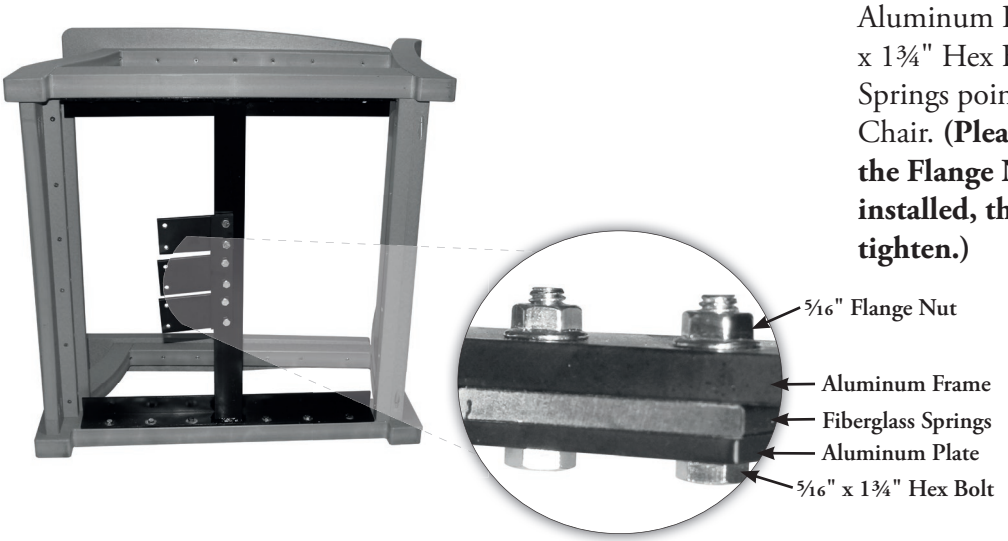

STEP #2 - Fasten the Swivel Mechanism to the Springs with an Aluminum Plate on top of the springs, using 6- 5⁄16" x 1¼" Hex Bolts, Lock Washers and Square Nuts. **(Please note: Only hand-tighten the Flange Nuts until all six Bolts are installed, then fully tighten.)**

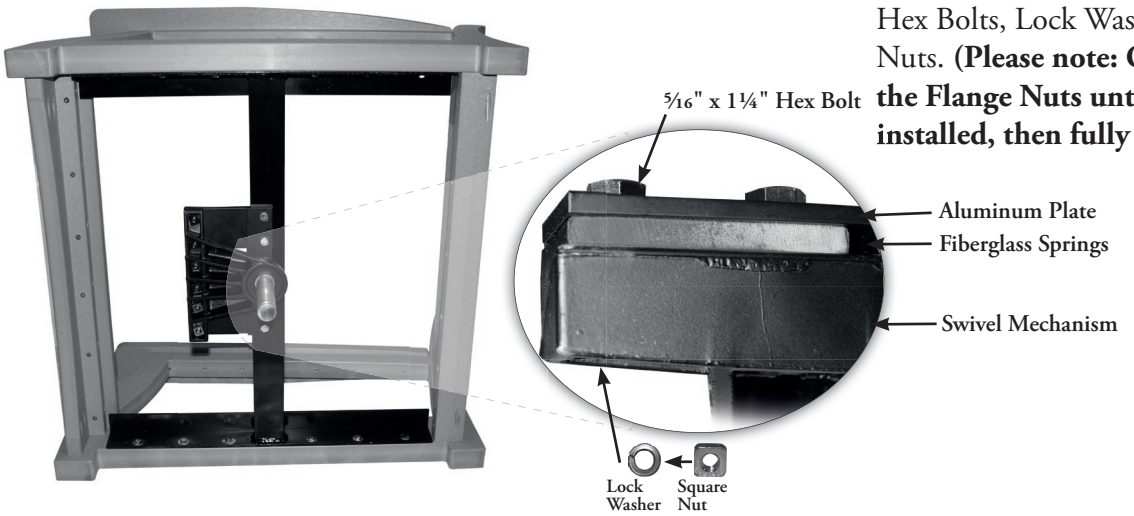

STEP #3 - Lift the Chair Assembly onto the base and place the stem of the Swivel Mechanism into the receiver of the base. Push firmly on the chair until it sits securely in the receiver.

Your Classic Terrace Swivel Rocker is complete!