OXFORD GARDEN
1729 Research Drive, Unit A Louisville, Kentucky 40299
877.866.3331 (fax) 502.719.8888

ESSEX CURVED BENCH - 83"

ITEM NUMBER EXC83

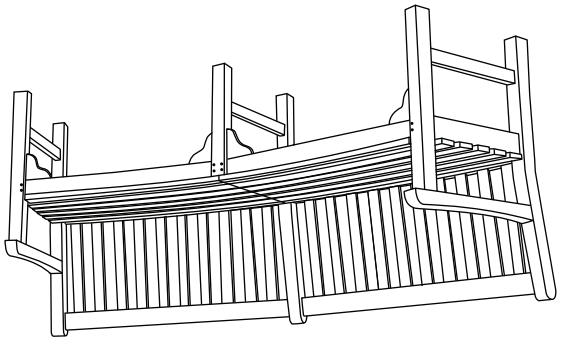

OXFORD GARDEN

About Shorea Wood

Shorea is a tropical hardwood that is comparable to teak. Because of its high oil content it is resistant to rotting, bug infestation, and the effects of wind, rain, sun, and snow. If left untreated shorea weathers naturally to a beautiful silver gray color. Some surface roughness may develop, especially at the end grain, but over a period of about one year, the natural weathering process will stabilize. Moderate checking in the grain is normal with exposure to the elements. Small surface cracks that may appear in no way affect the structural integrity of the furniture. As weather conditions and temperatures fluctuate these small cracks may expand and contract.

Wood Care Instruction

To prevent the staining of concrete or tile the furniture should be rinsed well after assembly to remove dust that might remain from the manufacturing process. Although shorea weathers well we recommend a routine application of teak oil or Cabot's Australian Timber Oil in extremely dry climates. A routine oiling is also recommended for furniture to be used for dining purposes to discourage staining from food and drink spills.

For seasonal cleaning rinse the furniture well and then scrub (using a sponge or soft bristle brush) with a mild solution of water, laundry detergent and a little bleach. Rinse with fresh water.

To restore the original wood color, Oxford Garden suggests applying Cabot's Australian Timber Oil or any high quality teak oil after cleaning. Test in an inconspicuous spot first, to approve the color. Application of oil is at the customer's discretion and is not covered by the warranty. Paint or any products with polyurethane are not recommended, as application of these products will void the warranty as well.

For additional information regarding our warranty, please visit www.oxfordgarden.com

Assembly Instructions

Essex Curved Bench - 83"

Tools (included)

Allen Wrench
Quantity: 1

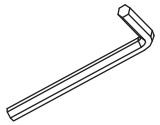

Components

① Right Arm Assembly
QUANTITY: 1

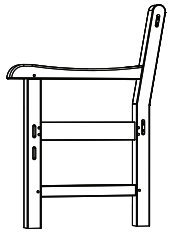

② Left Arm Assembly
QUANTITY: 1

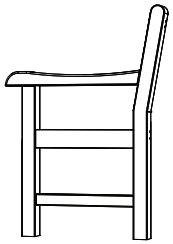

③ Center Brace Assembly
QUANTITY: 1

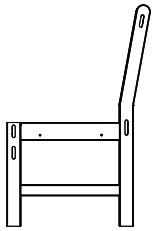

④ Back
QUANTITY: 1 (Right Shown)
QUANTITY: 1 (Left)

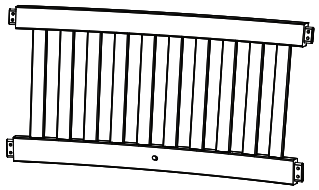

⑤ Seat
QUANTITY: 1 (Right Shown)
QUANTITY: 1 (Left)

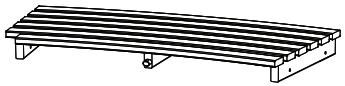

Components

⑥ Front Rail
QUANTITY: 1 (Right Shown)
QUANTITY: 1 (Left)

⑦ Right Corner Brace
QUANTITY: 2

⑧ Left Corner Brace
QUANTITY: 2

Hardware

Ⓐ Dowel
QUANTITY: 26

Ⓑ Wood Screw
QUANTITY: 8

Ⓒ 6 mm Allen Head Screw
QUANTITY: 4

Ⓓ 6 mm Bolts
QUANTITY: 2

Finishing Items (included)

Medium Grit Sandpaper

NOTE: A hammer and a phillips head screwdriver (not provided) will be needed for the assembly of this bench.

NOTE: If the furniture is going to be placed on a concrete or tile patio, it should first be rinsed well to remove the sawdust that may cause some staining.

This Item can be found on
www.OutdoorFurniturePlus.com
Call 877-595-8543 to order.

Step 1

NOTE: We highly recommend the use of two people for assembly of this bench. Do not drive the dowels into place until all components are fitted together. Stand center brace ③ upright. Insert the left back assembly ④ into the holes of the center brace.

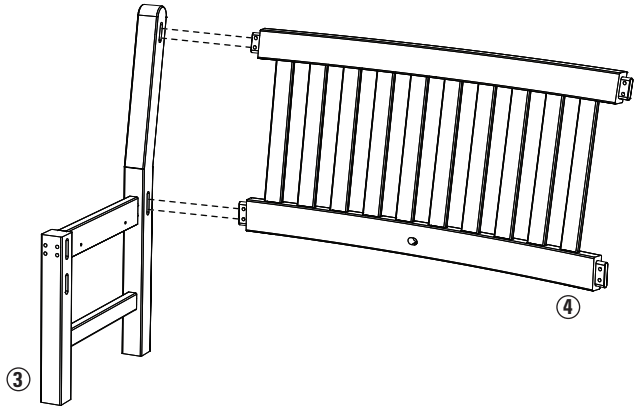

Step 2

Align the peg in the back of the seat support rail of the (left) seat assembly ⑤ with the hole in the back assembly.
Note: Each slat of the seat assembly overhangs the connecting braces at each end. The slats have a greater overhang at one end. The end with the greater overhang will be at the outside end of the bench.

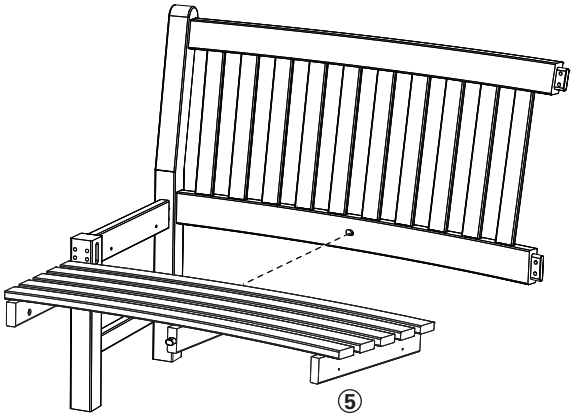

Step 3

Place (left) front seat rail ⑥ into position as shown.

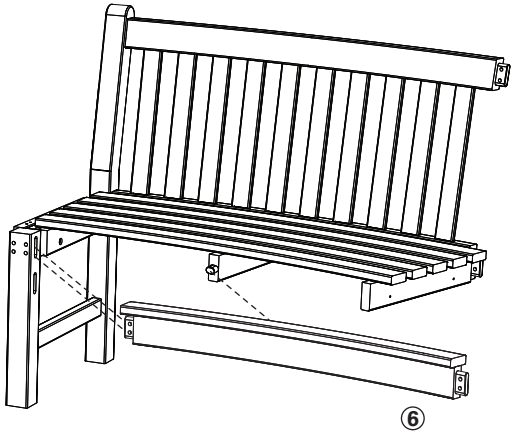

Step 4

Place (left) arm assembly ② onto the rails of the back assembly and front rail.

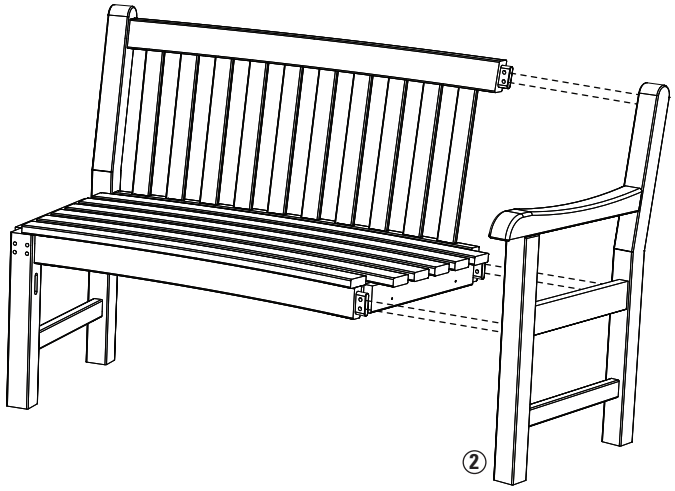

Step 5

Repeat Steps 1-4 for the right side of the bench. Start with the back, followed by the right seat assembly, right front seat rail and right arm assembly.

Step 6

Drive 24 dowels Ⓐ into place as shown.

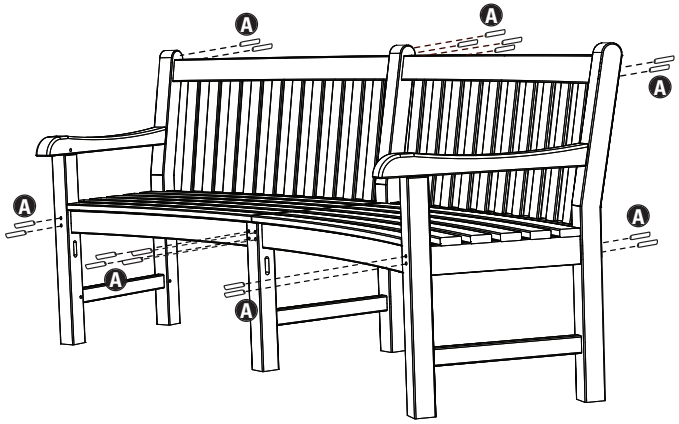

Step 7 (Detail: Back of corner brace)

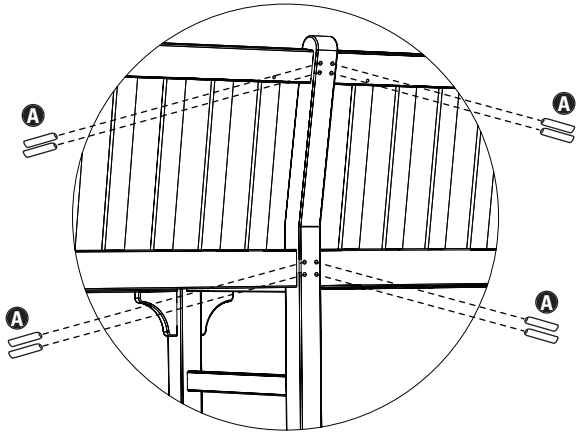

Step 8

With the two 6mm bolts Ⓓ, secure the seat assemblies in the middle of the bench.

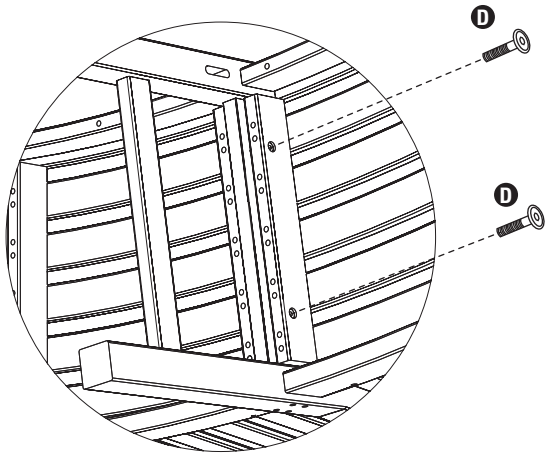

Step 9

Secure the seat assemblies at each end by driving 4 screws Ⓑ through the end brace on the underside of the seat assemblies into the arm assemblies.

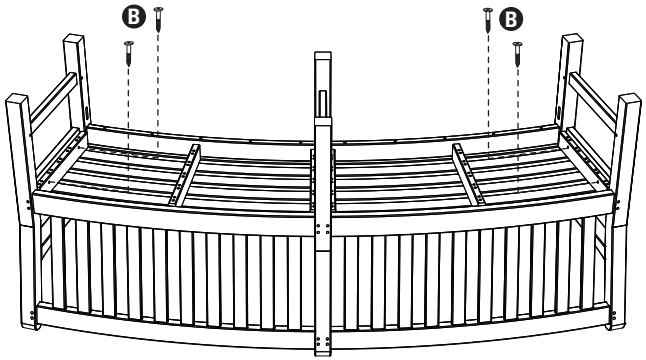

Step 10

Using the Allen wrench provided, secure the 4 decorative corner braces ⑦ and ⑧ using the 4 Allen head screws Ⓒ .

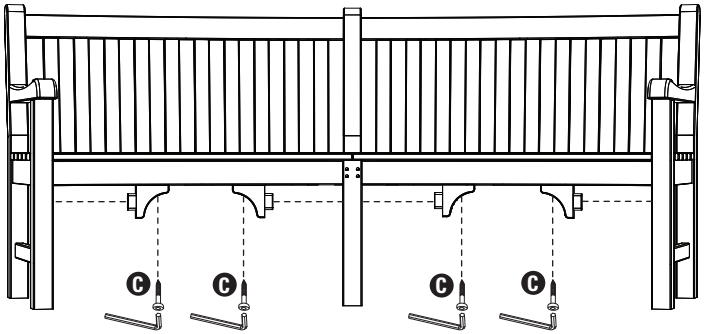
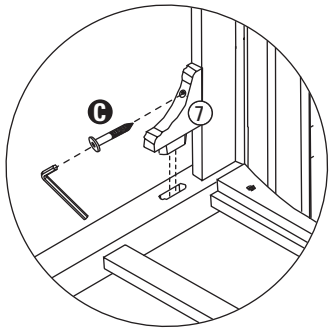
Step 11 Detail (Corner Braces)