COMPONENTS

① Table Top Assembly
Quantity: 1

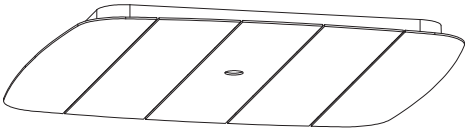

② Table Leg
Quantity: 4

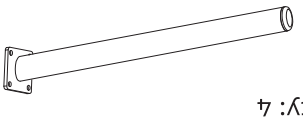

HARDWARE

Ⓐ Machine Bolt
Quantity: 16

Ⓑ Metal Washer
Quantity: 16

Ⓒ Allen Wrench
Quantity: 1

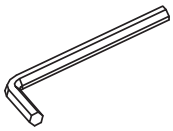

NOTES

Table top and legs may vary from illustrations but the assembly is the same for all Eiland tables.

15 Kingbrook Parkway, Suite 100
Simpsonville, KY 40067

p. 877.866.3331 f. 502.719.8888

oxfordgarden.com

Ver. 2018.9.17

OXFORD & GARDEN®

EILAND DINING & OCCASIONAL TABLES

ASSEMBLY INSTRUCTIONS

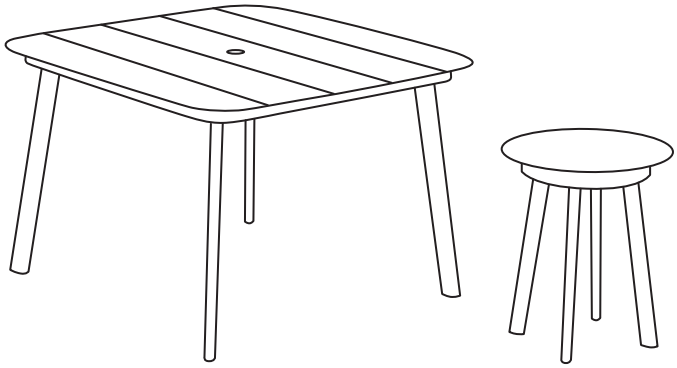

Thoughtful Design **MADE RIGHT**

INSTRUCTIONS

STEP 1

Lay table top ① upside down on top of provided cardboard box or blanket to protect the surface of the table top while assembling.

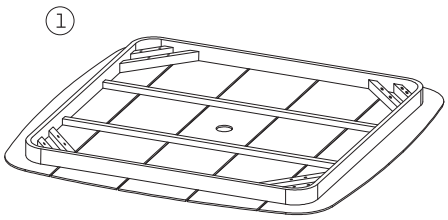

STEP 2

Using the allen wrench provided, secure table leg ② to table top using metal washers Ⓑ and bolts Ⓐ. Repeat for the remaining 3 legs.

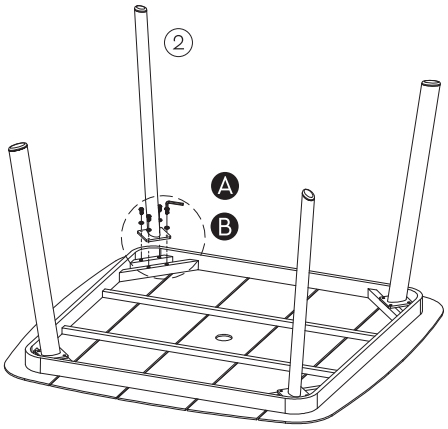

STEP 2 (detail)

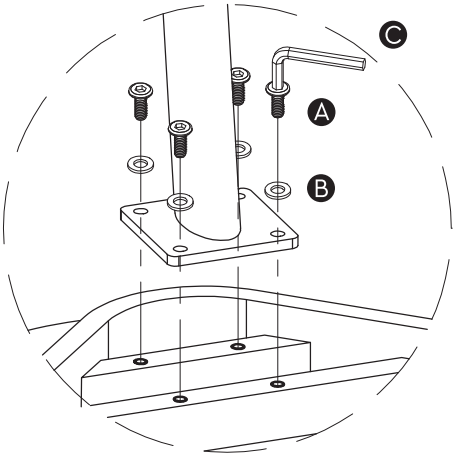

STEP 3
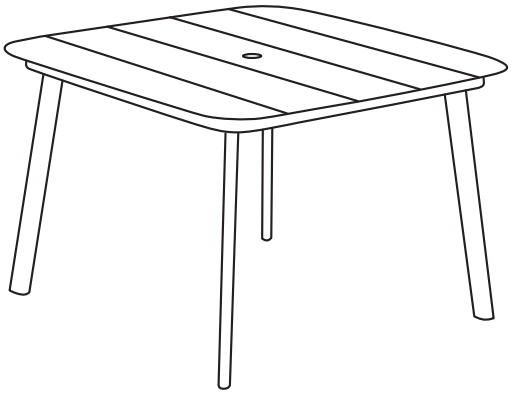
Carefully turn assembled table in an upright position.