CONNECTING HARDWARE

- **D** Connector Bolt
  Quantity: 1
- **E** Metal Washer
  Quantity: 1
- **F** Lock Nut
  Quantity: 1
- **G** Allen Wrench
  Quantity: 1

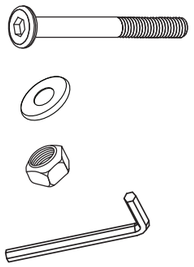

CONNECTING BRACKETS

Each base unit is equipped with built mounting brackets attached to the bottom of the side panels. When connecting 2 or more units together, remove one bolt from bracket and loosen the other bolt to rotate bracket 90 degrees.

See reverse for Travira Modular Base Assembly Instructions.

CONNECTING TWO OR MORE MODULAR UNITS

To secure 2 or more units together use both the preinstalled CONNECTING BRACKETS found on the bottom of the base, and the long connector bolt, washer, and lock nut included in the hardware pack.

Lay units to be connected on their back on a clean, flat surface, such as provided cardboard box or blanket, to protect the surfaces from scratches. Remove one bolt from each bracket and loosen the other bolt to rotate bracket 90 degrees. Align brackets with holes on base of second unit and secure with washer & bolt.

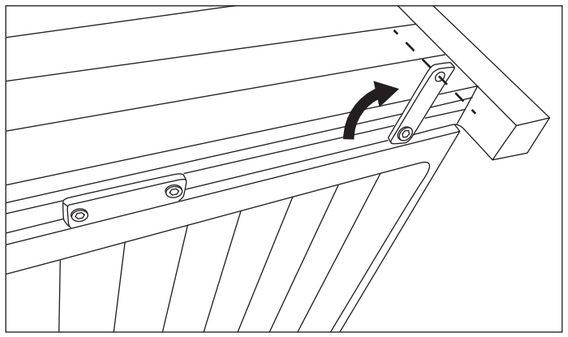

Join the top sections of the units together by inserting the long connector bolt through the adjoining holes of two units. Secure tightly using a washer and locking nut. Return joined units to their upright standing position.

NOTE: For stability and safety, is essential that all units be secured to each other at both top and bottom locations.

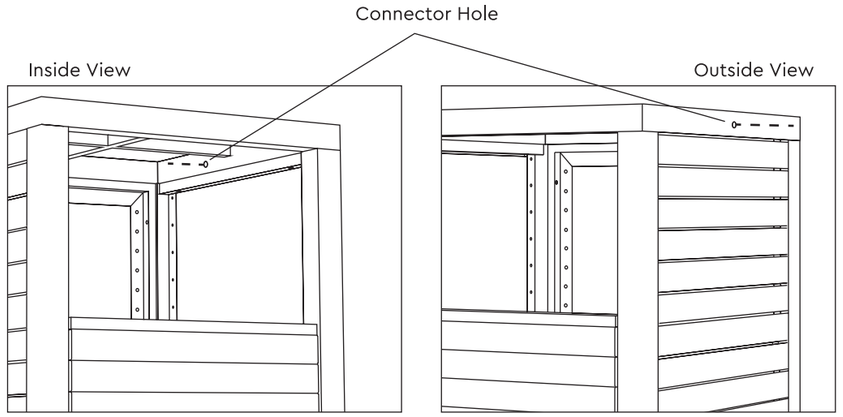

SUGGESTED CONFIGURATIONS

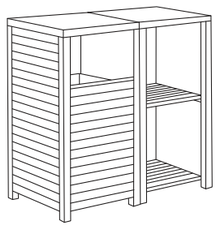

Receptacle Base +
Shelf Base

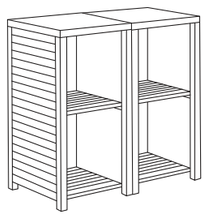

Shelf Base +
Shelf Base

Receptacle Base +
Receptacle Base

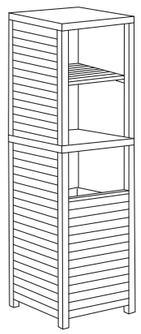

Receptacle Base +
Hutch, Single Stack

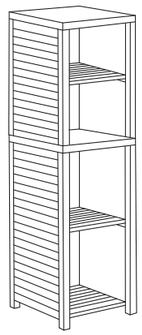

Shelf Base +
Hutch, Single Stack

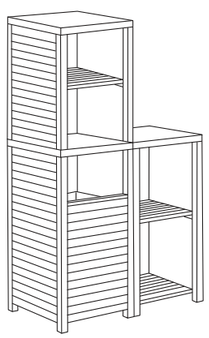

Receptacle Base +
Shelf Base +
Hutch, L- Stack

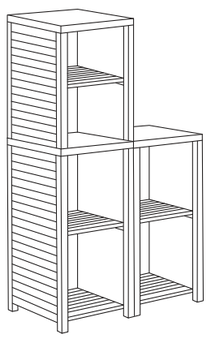

2 Shelf Bases +
Hutch, L- Stack

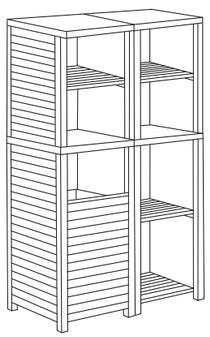

Receptacle Base + Shelf
Base + 2 Hutch Units,
Double Stack

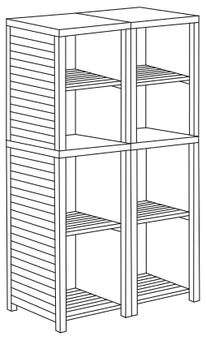

2 Shelf Bases +
2 Hutch Units,
Double Stack

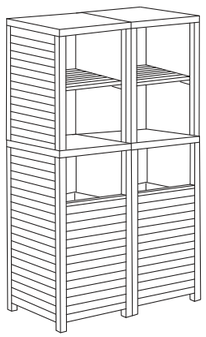

2 Receptacle Bases +
2 Hutch Units,
Double Stack

15 Kingbrook Parkway, Suite 100
Simpsonville, KY 40067

p. 877.866.3331 f. 502.719.8888

oxfordgarden.com

Ver. 2018.9.18

OXFORD & GARDEN®

Travira Modular Base

ASSEMBLY INSTRUCTIONS

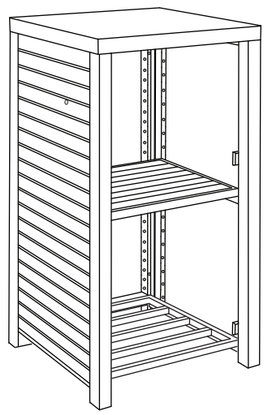

Thoughtful Design **MADE RIGHT**

COMPONENTS

① Left Panel – Quantity: 1
② Back Panel – Quantity: 1
③ Right Panel – Quantity: 1
④ Top – Quantity: 1
⑤ Open Floor Grate (optional) – Quantity: 1
⑥ Tekwood Floor Panel (optional) – Quantity: 1
⑦ Slatted Shelf (optional) – Quantity: 1
⑧ Trash Bin (optional) – Quantity: 1
⑨ Access Door Panel (optional) – Quantity: 1
⑩ Vinyl Labels (optional)

HARDWARE

Ⓐ Machine Bolts
Quantity: 14

Ⓑ Metal Washers
Quantity: 14

Ⓒ Allen Wrench
Quantity: 1

NOTE:

To protect the finish surface of your unit from scratches, always assemble on top of provided cardboard box or a clean blanket.

1 CONNECT LEFT SIDE TO BACK PANEL

Attach LEFT SIDE PANEL ① to BACK PANEL ② using 3 washers & bolts. **NOTE:** Leave bolts slightly loose to help with alignment of top.

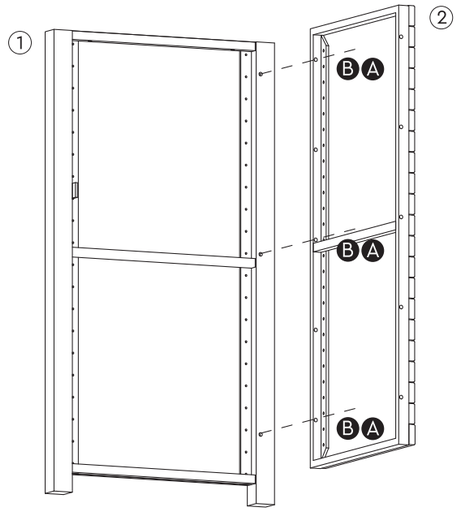

2 CONNECT RIGHT SIDE TO BACK PANEL

Attach RIGHT SIDE PANEL ③ to BACK PANEL ② using 3 washers & bolts. **NOTE:** Leave bolts slightly loose to help with alignment of top.

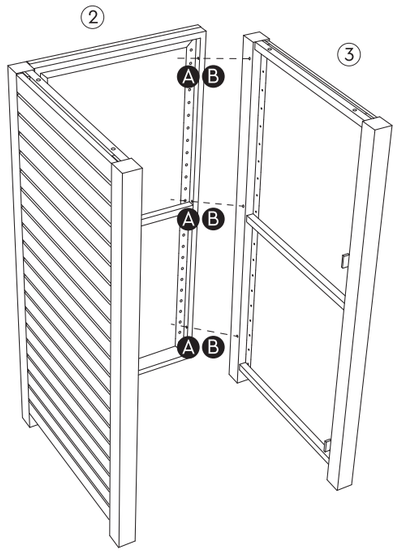

3 CONNECT TOP TO SIDE ASSEMBLY

Attach TOP ④ to unit using 4 washers and bolts. Front of top DOES NOT HAVE connector hole. **NOTE:** At this time firmly tighten ALL INSTALLATION BOLTS on the unit.

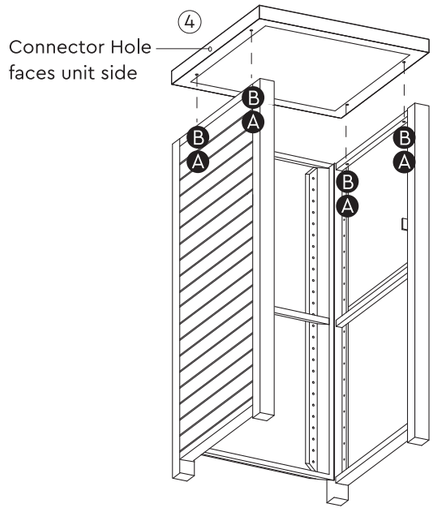

4 INSTALL BOTTOM PANEL

Carefully turn unit upside down, being careful not to scratch the top finish. Install either OPEN FLOOR GRATE ⑤ (Option 1) **OR** TEKWOOD FLOOR PANEL ⑥ (Option 2) to the unit using 4 washers and bolts.

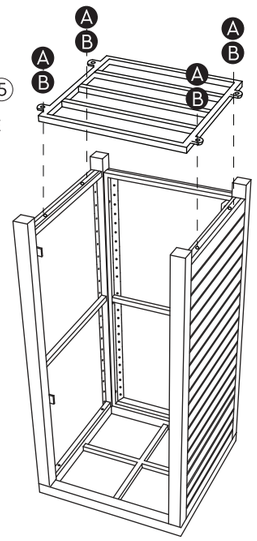

OPEN FLOOR GRATE
(Option 1)

OR

TEKWOOD SLAT BOTTOM
(Option 2)

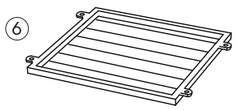

5 INSTALL SLATTED SHELF

Return unit to its upright position. Insert the optional SLOTTED SHELF ⑦, which rests firmly on the mid-support bars.

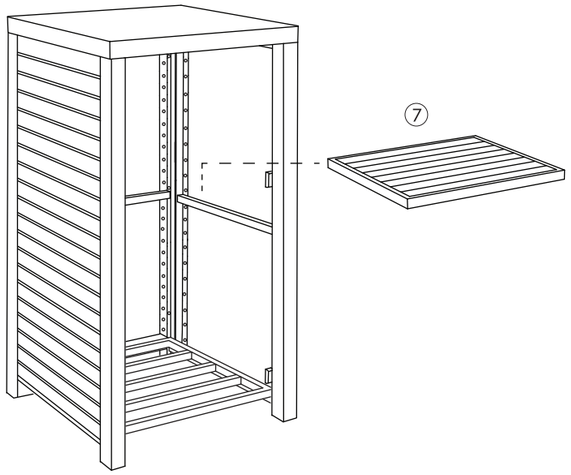

6 INSTALL TRASH BIN & ACCESS DOOR PANEL

Place optional TRASH BIN ⑧ inside unit and install ACCESS DOOR PANEL ⑨ by aligning notched tabs on front opening with tabs on the door panel. Push down to secure.

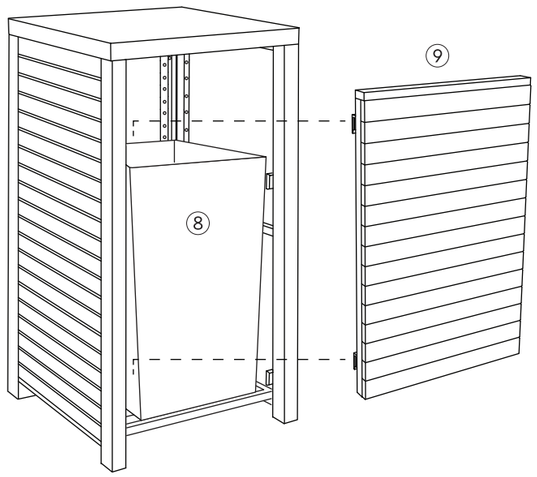

7 APPLY OPTIONAL DOOR PANEL LETTERING

Place a small mark to indicate the center line of the DOOR PANEL and the center of the LETTERING. Carefully peel the backing from the adhesive lettering, leaving the protective strip on top of the letters.

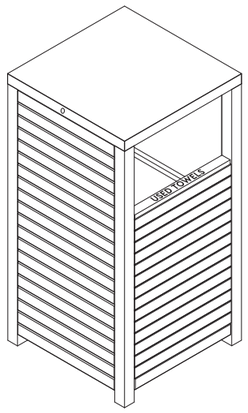

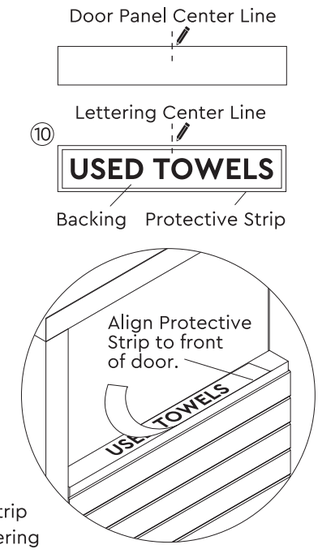

Align bottom of protective strip with front of door. Press lettering firmly in place. Burnish lightly and remove the protective strip from the lettering.