Assembly Directions for
Gliding Settee Table

#PGST2400

First, fasten wedge to bottom of 2"x6" with 2½" screws. Ensure that the side of wedge and the end of 2"x6" are flush.

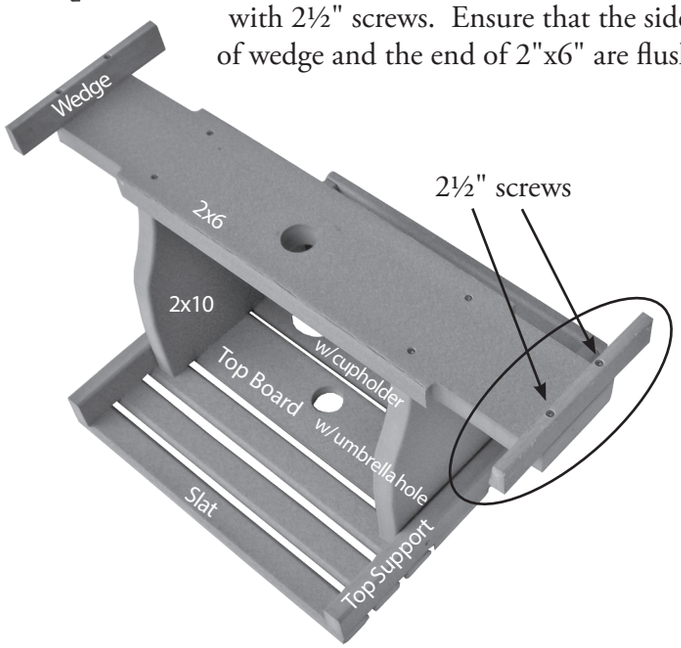

Then, mark location of Quick Attach bracket with template provided. Fasten with 2" screws.

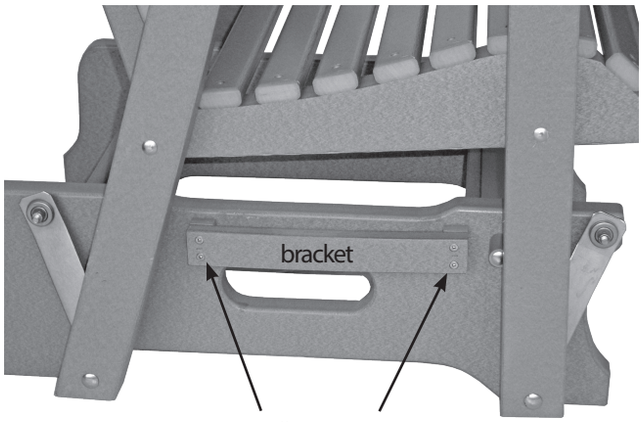

PACKAGE CONTENTS	
1	Settee Table
2	Quick Attach Brackets
1	Hardware Package

TOOLS NEEDED:
Screw Gun with
Square Drive Bit

HARDWARE PACKAGE	
4	2½" Screws
8	2" Screws

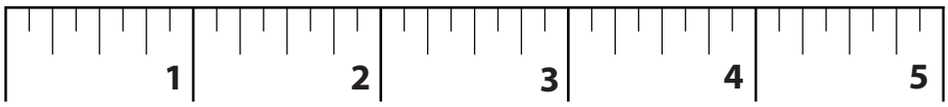

Use to measure bolts

Top Part of Bracket

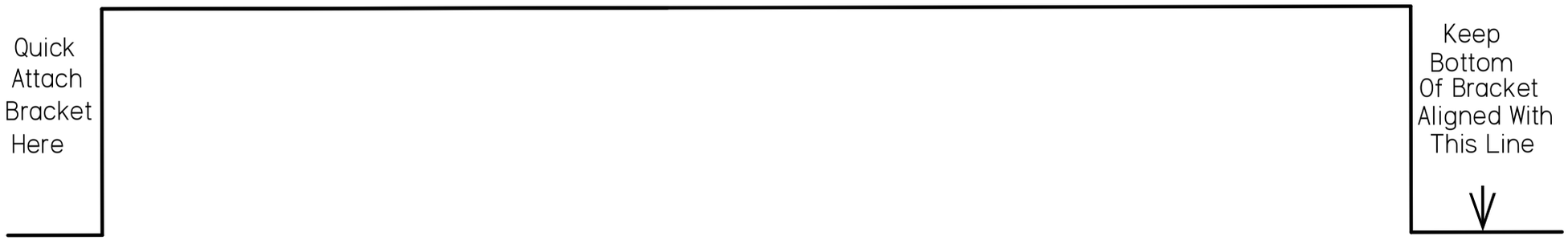

< Front of base

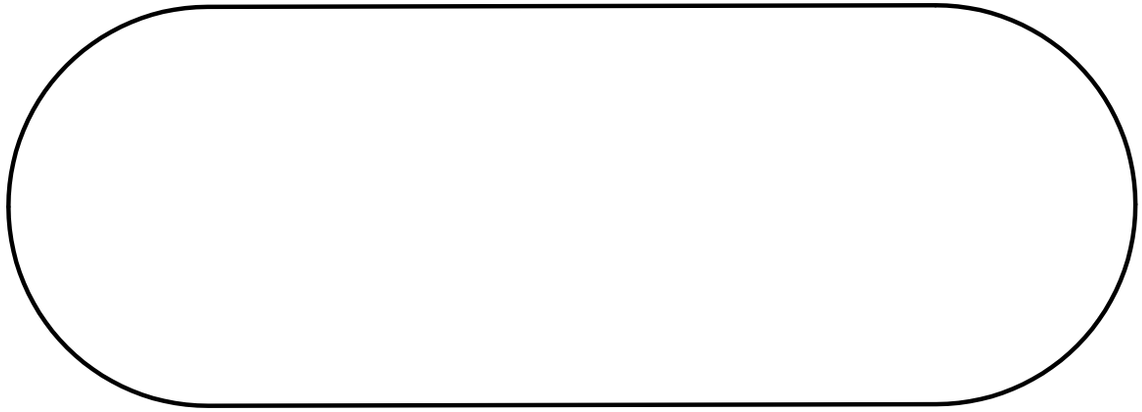

Match With Hole In Glider Base

Template To Make Quick Attach Bracket On Glider Base