POLYWOOD®

Intelligent Design™

Model: ECD16

__(1) Seat
__(1) Back
__(2) Front legs
__(2) Back legs
__(2) Arms
__(2) Braces
__(1) Hardware pack

TOOLS NEEDED

7/16 Wrench
4mm HEX KEY, ALLEN, T-HANDLE
(INCLUDED)

Qty.	Description
6	A-.27 X 2 SOCKET WAFER A
2	B-.27 X 3 SOCKET WAFER A
8	C-1/4-20 X 1-7/8 WAFER SHCS
2	D-1/4-20 X 2-1/4 WAFER SHCS
10	E-1/4 FLAT WASHER
10	F-1/4-20 NYLOCK NUT

Step 1
Lay seat on its side.
Attach front leg and back leg to seat. Now flip seat around and do the other side. Uses (8) 1-7/8" bolts, nuts and washer

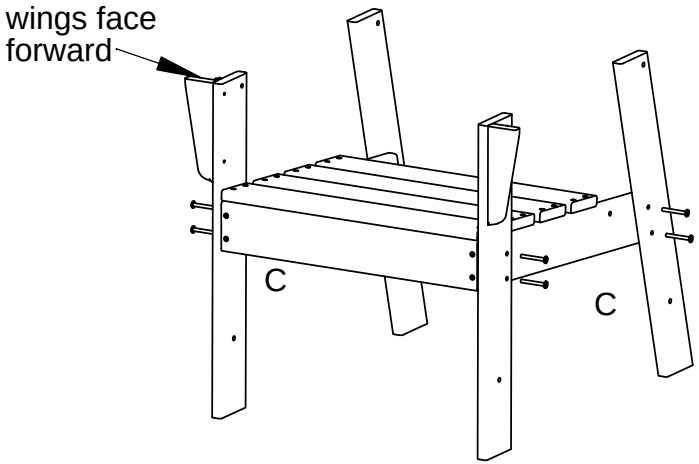

Step 2
Attach arms to front leg using (2) 2-1/4" bolts, nuts and washer

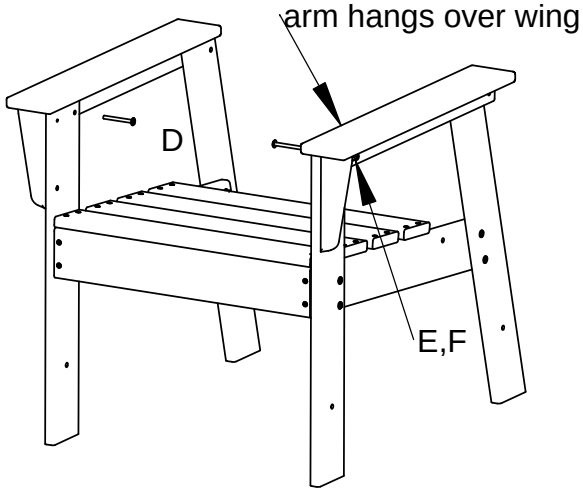

Step 3
Attach back to seat using (2) .27x2" wafer screws

Attach back to rear leg using (2) .27x3" screws

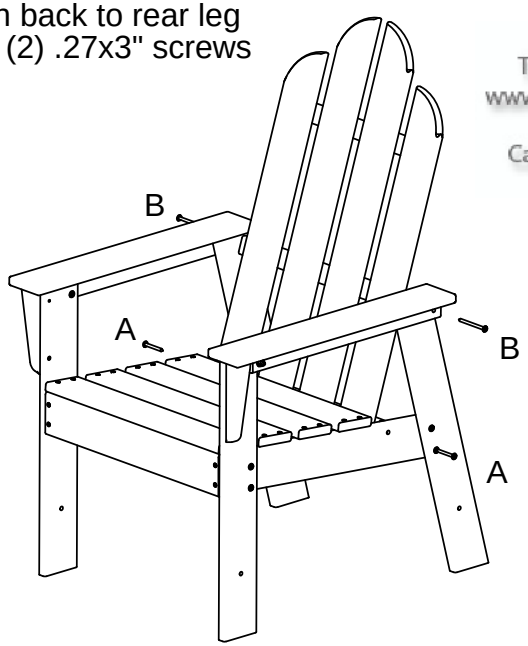

Step 4
Attach braces to legs using (4) .27x2" wafer screws

This Item can be found on
www.OutdoorFurnituresPlus.com

Call 877-595-8543 to order.

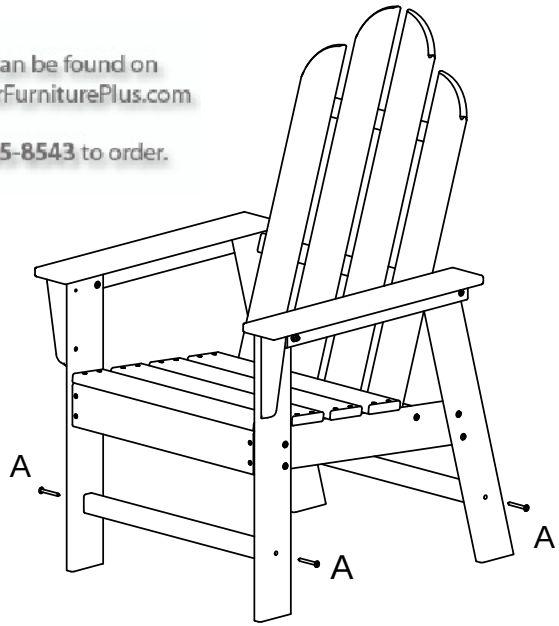

ASSEMBLY INSTRUCTIONS

ALL HARDWARE IS STAINLESS STEEL

11/28/2012