USER GUIDE

SAFETY • INSTALLATION & INTEGRATION • OPERATING INSTRUCTIONS • MAINTENANCE • SERVICE

Modular 3000 Series • 3018WC • 18" Wine Captain® Model

Contents

Intro

Safety

- Safety and Warning
- Disposal

Installation

- Environmental Requirements
- Electrical
- Cutout Dimensions
- Product Dimensions
- Side by Side Installation
- Anti-Tip Bracket
- General Installation
- Integrated Panel Dimensions
- Integrated Grille / Plinth Dimensions
- Integrated Panel Installation
- Grille / Plinth Installation
- Door Swing
- Door Stop
- Door Adjust

Operating Instructions

- First Use
- Control Operation
- Sabbath Mode
- Airflow and Product Loading
- U-Line Wine Guide
- Recommended Wine Storage

Maintenance

- Cleaning
- Cleaning Condenser
- Wine Rack Installation
- Extended Non-Use

Service

- Accessories
- Troubleshooting
- Warranty

WELCOME TO U-LINE

Congratulations on your U-Line purchase. Your product comes from a company with over five decades and three generations of premium modular ice making, refrigeration, and wine preservation experience. U-Line continues to be the American leader, delivering versatility and flexibility for multiple applications including residential, light commercial, outdoor and marine use. U-Line's complete product collection includes modular Wine Captain® Models, Beverage Centers, Clear Ice Machines, Crescent Ice Makers, Glass & Solid Door Refrigerators, Refrigerator Drawers, Freezers, and Combo® Models.

U-Line has captivated those with an appreciation for the finer things with exceptional functionality, style, inspired innovations and attention to even the smallest details. We are known and respected for our unwavering dedication to product design, quality and selection. U-Line is headquartered in Milwaukee, Wisconsin with a west coast office located in Laguna Beach, California and European support in Dublin, Ireland. U-Line has shipped product to five continents for over two decades and is proud to have the opportunity to ship to you.

PRODUCT INFORMATION

Looking for additional information on your product? User Guides, Quick Reference Guides, CAD Drawings, Integrated Panel Instructions, Compliance Documentation and Product Warranty information are all available for reference and download at u-line.com under Documentation.

PROPERTY DAMAGE / INJURY CONCERNS

In the unlikely event property damage or personal injury is suspected related to a U-Line product, please take the following steps:

1. U-Line Customer Care must be contacted immediately at +1.800.779.2547.
2. Service or repairs performed on the unit without prior written approval from U-Line is not permitted. If the unit has been altered or repaired in the field without prior written approval from U-Line, claims will not be eligible.

SERVICE INFORMATION

Answers to Customer Frequently Asked Questions are available at u-line.com under Customer Care or you may contact our Customer Care group directly, contact information below.

GENERAL INQUIRIES

U-Line Corporation
8900 N. 55th Street
Milwaukee, Wisconsin 53223 USA
Monday - Friday 8:00 am to 4:30 pm CST
T: +1.414.354.0300
F: +1.414.354.7905
Email: sales@u-line.com
u-line.com

SERVICE & PARTS ASSISTANCE

Monday - Friday 8:00 am to 5:30 pm CST
T: +1.800.779.2547
F: +1.414.354.5696
Service Email: onlineservice@u-line.com
Parts Email: onlineparts@u-line.com

CONNECT WITH US

Designed, engineered and assembled in WI, USA

Safety and Warning

NOTICE

Please read all instructions before installing, operating, or servicing the appliance.

Use this appliance for its intended purpose only and follow these general precautions with those listed throughout this guide:

SAFETY ALERT DEFINITIONS

Throughout this guide are safety items labeled with a Danger, Warning or Caution based on the risk type:

⚠ DANGER

Danger means that failure to follow this safety statement will result in severe personal injury or death.

⚠ WARNING

Warning means that failure to follow this safety statement could result in serious personal injury or death.

⚠ CAUTION

Caution means that failure to follow this safety statement may result in minor or moderate personal injury, property or equipment damage.

⚠ DANGER

This unit contains R600a (Isobutane) which is a flammable hydrocarbon. It is safe for regular use. Do not use sharp objects to expedite defrosting. Do not service without consulting the "R600a specifications" section included in the User Guide. Do not damage the refrigerant circuit.

⚠ WARNING

Service must be done by factory authorized service personnel. Any parts shall be replaced with like components. Failure to comply could increase the risk of possible ignition due to incorrect parts or improper service.

Product Disposal and Recycling

⚠ DANGER

RISK OF CHILD ENTRAPMENT. Before you throw away your old refrigerator or freezer, take off the doors and leave shelves in place so children may not easily climb inside.

If the unit is being removed from service for disposal, check and obey all federal, state and local regulations regarding the disposal and recycling of refrigeration appliances, and follow these steps completely:

1. Remove all consumable contents from the unit.

2. Disconnect electric current to the unit's power receptacle. Unplug the electrical cord from its socket.

3. Remove the cabinet door.

Environmental Requirements

This unit is designed to operate between 50°F (10°C) and 100°F (37°C). Higher ambient temperatures may reduce the unit's ability to reach low temperatures and/or reduce ice production on applicable models.

For best performance, keep the unit out of direct sunlight and away from heat generating equipment.

In climates where high humidity and dew points are present, condensation may appear on outside surfaces. This is considered normal. The condensation will evaporate when the humidity drops.

⚠ CAUTION

Damages caused by ambient temperatures of 40°F (5°C) or below are not covered by the warranty.

Electrical

⚠ WARNING

SHOCK HAZARD — Electrical Grounding Required. Never attempt to repair or perform maintenance on the unit until the electricity has been disconnected.

Never remove the round grounding prong from the plug and never use a two-prong grounding adapter.

Altering, cutting of power cord, removal of power cord, removal of power plug, or direct wiring can cause serious injury, fire and or loss of property and or life, and will void the warranty.

Never use an extension cord to connect power to the unit.

Always keep your working area dry.

NOTICE

Electrical installation must observe all state and local codes. This unit requires connection to a grounded (three-prong), polarized receptacle that has been placed by a qualified electrician.

The unit requires a grounded and polarized 115 VAC, 60 Hz, 15A power supply (normal household current). An individual, properly grounded branch circuit or circuit breaker is recommended. GFCI (ground fault circuit interrupter) is usually not required for fixed location appliances and is not recommended for your unit because a GFCI could be prone to nuisance tripping. However, be sure to consult your local codes.

See CUT-OUT DIMENSIONS for recommended receptacle location.

Cutout Dimensions

PREPARE SITE

Your U-Line product has been designed exclusively for a built-in installation. When built-in, your unit does not require additional air space for top, sides, or rear. However, the front grille must NOT be obstructed.

The Modular 3000 Series units are engineered with a variety of adjustment features to help ensure a seamless installation. Adjustable doors, leveling legs and grille will assist in fine tuning the installation.

All 3000 Series models fully integrate into overlay/face frame, inset or European/frameless cabinet styles and install seamlessly into standard 24" (610 mm) depth cabinet base.

NOTICE

Unit can NOT be installed behind a closed cabinet door.

U-Line products are esigned and manufactured to be seamlessly installed in the specified cut-out openings shown, and vdariance to the floors or cabinetry must be accounted for in your installation.

CUT-OUT DIMENSIONS

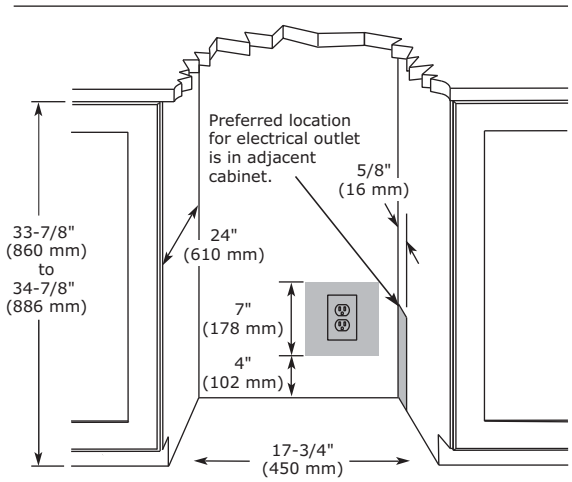

Product Dimensions

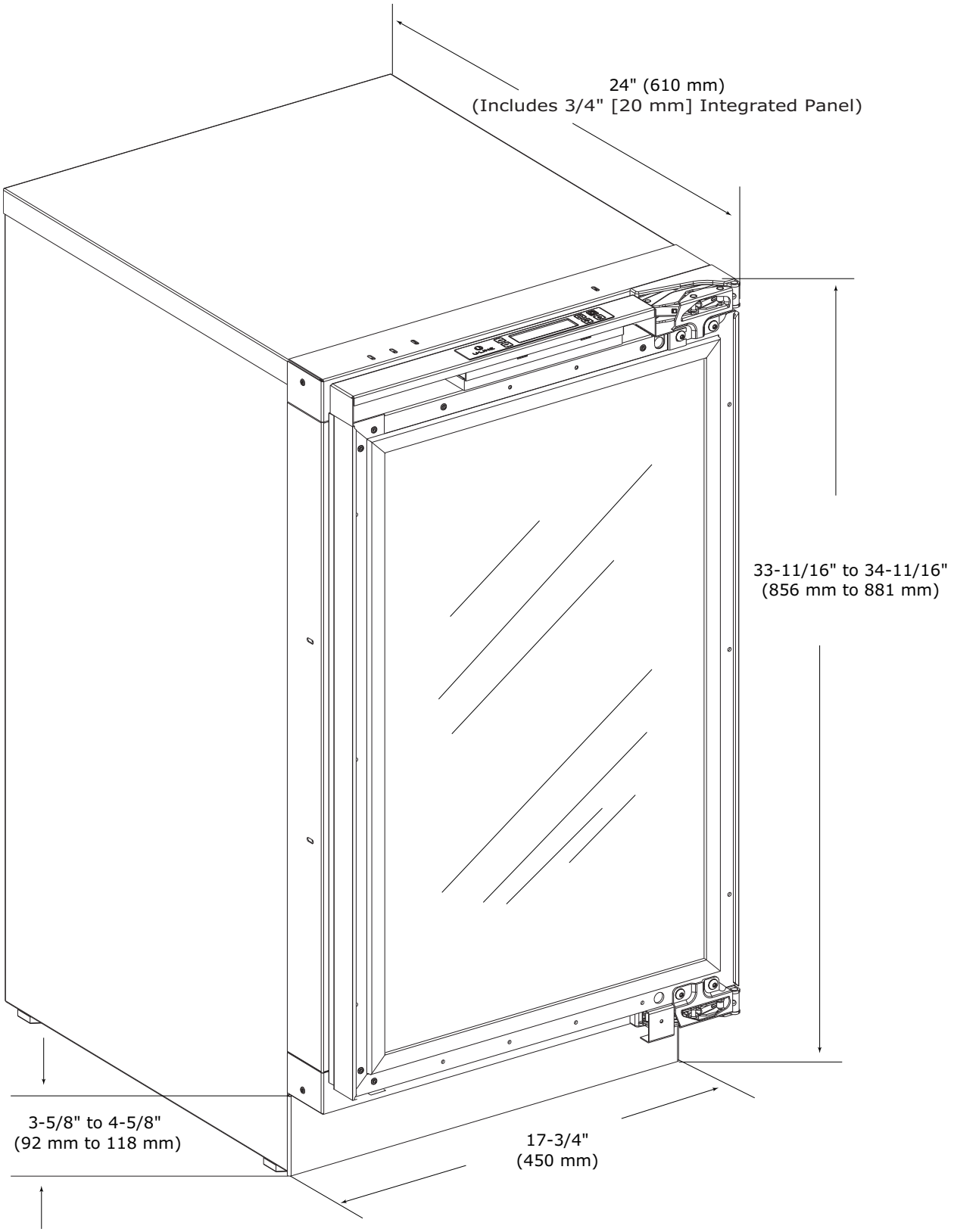

Side by Side Installation

OTHER SITE REQUIREMENTS

Side-By-Side Installation

Units must operate from separate, properly grounded electrical receptacles placed according to each unit's electrical specifications requirements.

Cut-out width for a side-by-side installation is the total of the widths listed under Cut-Out Dimensions in each unit's Installation Guide. Each door can be opened individually (one at a time) without interference.

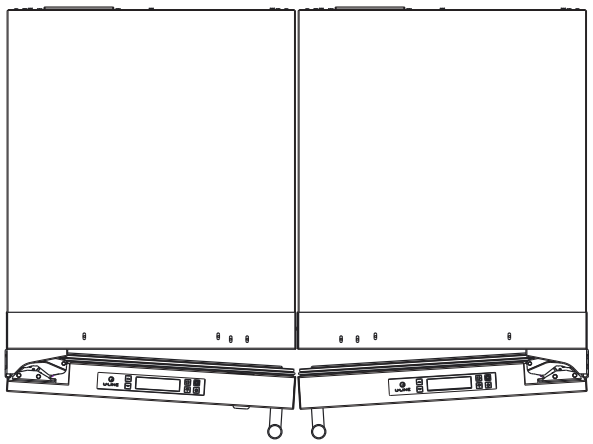

However, to ensure unobstructed door swing (opening both doors at the same time), a 1/4" (6.4 mm) of space needs to be maintained between the units.

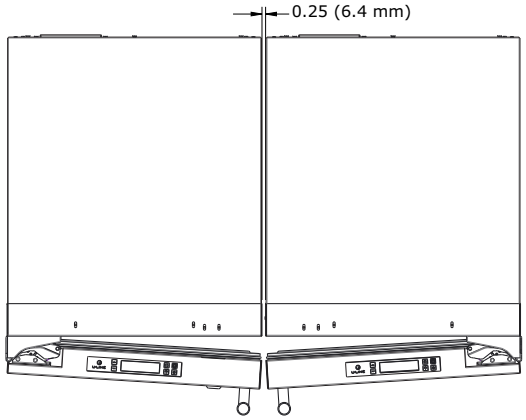

Hinge-By-Hinge Installation (Mullion)

When installing two units Hinge by Hinge 13/16" or (22 mm) is required for integrated models, additional space for any knobs, pulls or handles installed.

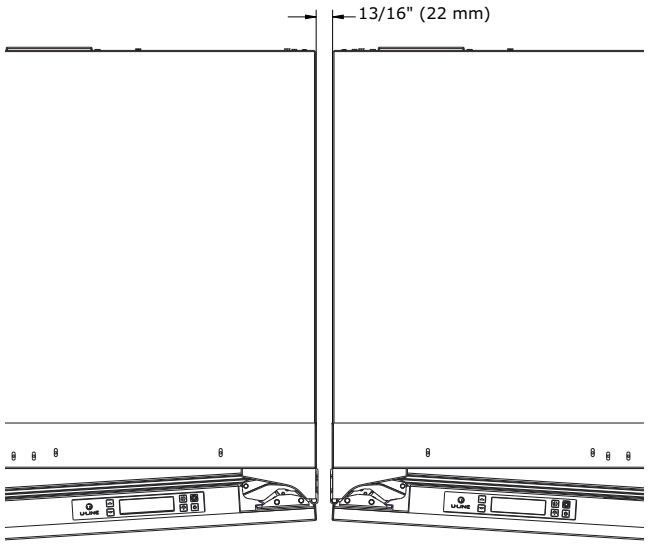

Stainless steel models which include the standard stainless handle will require 4-9/16" (116 mm), to allow both doors to open to 90° at the same time.

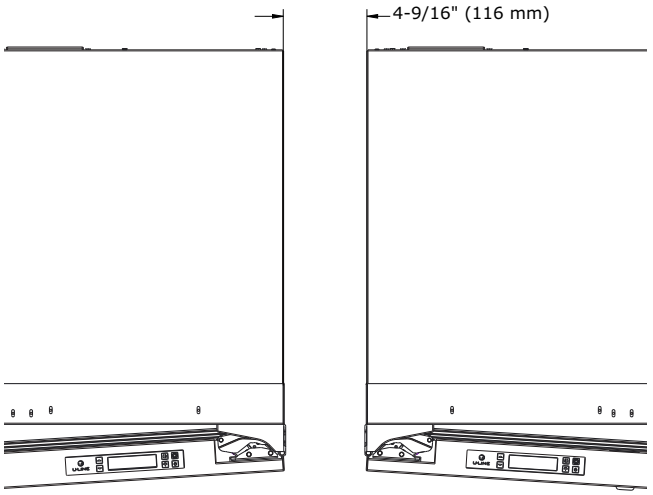

Anti-Tip Bracket

⚠ CAUTION

The anti-tip bracket must be installed to prevent the unit from tipping when doors are fully opened, or excess weight is placed on the front of the unit.

The anti-tip bracket has multiple mounting options. Mounting will depend on your particular cabinet configuration. Follow the instructions below to secure the anti-tip plate to the unit. Locate your anti-tip bracket and 5 #8x5/8" (#8x16 mm) screws included with your unit.

TOP MOUNT

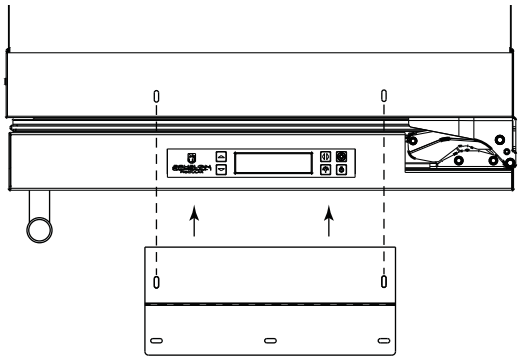

Top mount configurations work well with fully secured wood or laminate countertops.

1. Align the bracket on top of your unit as shown above. The bracket must be used to ensure a secure mount.

2. Using 2 of the supplied #8x5/8" (#8x16 mm) screws, install screws into the plate using a #2 Phillips head screwdriver.

3. Completely slide the unit into its position in the cabinet. Be certain unit height is properly adjusted. (See Leveling section).

4. Open door completely. Make certain door clears surrounding cabinetry.

5. Using a 3/32" (3 mm) drill bit, drill 3 pilot holes, 5/8" (16 mm) deep into bottom of counter top. Use the anti-tip bracket as a template.

6. Install the remaining 3 #8x5/8" (#8x16 mm) screws into the plate using a #2 Phillips head screwdriver.

SIDE MOUNT

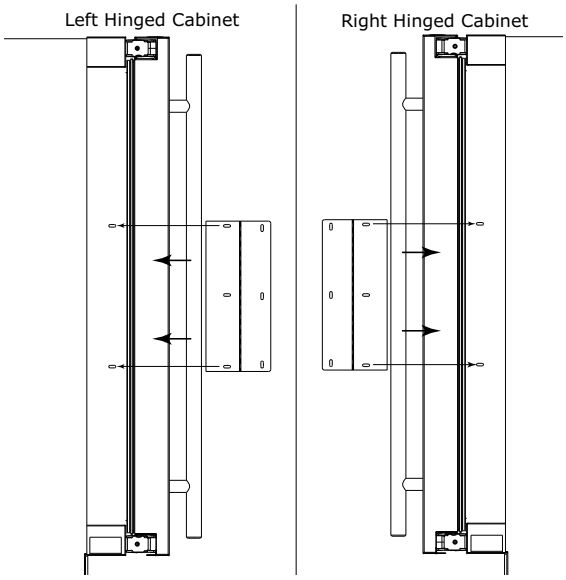

Side mount configurations work well if you have a granite countertop or do not wish to mount the bracket to the underside of your countertop.

1. Align the bracket to the hinge side of the unit as shown above.

2. Using 2 of the supplied #8x5/8" (#8x16 mm) screws, install screws into the plate using a #2 Phillips head screwdriver.

3. Completely slide the unit into its position in the cabinet. Be certain unit height is properly adjusted. (See Leveling section).

4. Open door completely. Make certain door clears surrounding cabinetry.

5. Using a 3/32" (3 mm) drill bit, drill 3 pilot holes, 5/8" (16 mm) deep into cabinetry frame using the anti-tip bracket as a template.

6. Install the remaining 3 #8x5/8" (#8x16 mm) screws into the plate using a #2 Phillips head screwdriver.

General Installation

1. Use a level to confirm the unit is level. Level should be placed along top edge and side edge as shown.

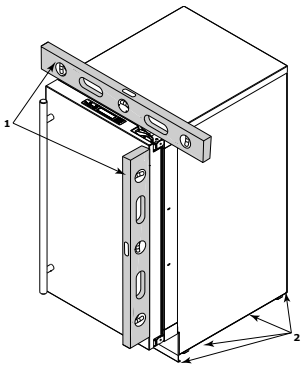

2. If the unit is not level, remove grille and adjust feet as necessary. Use included tool to adjust the height of the rear leveler feet. Turn screw clockwise to raise the rear foot, counter-clockwise to lower.

3. Confirm the unit is level after each adjustment and repeat the previous steps until the unit is level.

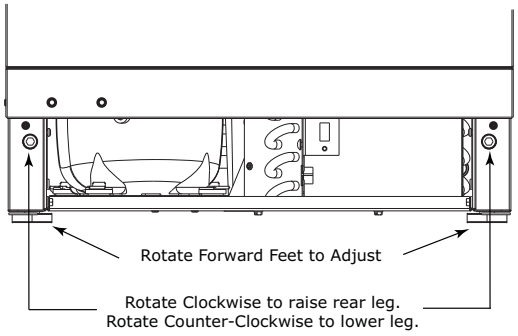

INSTALLATION TIP

If the room floor is higher than the floor in the cut-out opening, adjust the rear feet to achieve a total unit rear height of 1/8" (3 mm) less than the opening's rear height. Shorten the unit height in the front by adjusting the front feet. This allows the unit to be gently tipped into the opening. Adjust the front feet to level the unit after it is correctly positioned in the opening.

INSTALLATION

1. Plug in the power cord.

2. Gently push the unit into position. Be careful to not entangle the power cord.

3. Re-check the leveling, from front to back and side to side. Make any necessary adjustments. The unit's top surface should be approximately 1/8" (3 mm) below the countertop.

4. Install the anti-tip bracket.

5. Remove the tape from the glass shelves and wipe out the inside of the unit with a clean, water-dampened cloth.

*For additional information, please see Service Trouble Shooting section.

Integrated Panel Dimensions

INTEGRATED FRAME

NOTICE

Due to differences in surrounding cabinetry the panel may not perfectly align with door. The procedure below is designed to provide a finished integrated panel that seamlessly integrates with surrounding cabinetry.

Panel Preparation

A full integrated door panel completely covers the door frame and provides a built-in appearance.

NOTICE

The door panel must not weigh more than 20 lbs (10 kg).

It is important to ensure that all drilled holes are drilled to the correct depth in order to avoid splits in the wood when hardware is installed.

1. Cut the panels to the dimensions listed in the diagram below.

2. Optional: Stain or Finish panel to desired stain or color. Be sure to closely follow the instructions provided by the manufacturer.

3. Optional: Install handles and hardware.

NOTICE

When applying an integrated frame to a unit, ensure that both sides are finished in order to prevent warping. In some frame installations, the panel may be visible through the glass while the door is open.

Integrated Frame Dimensions

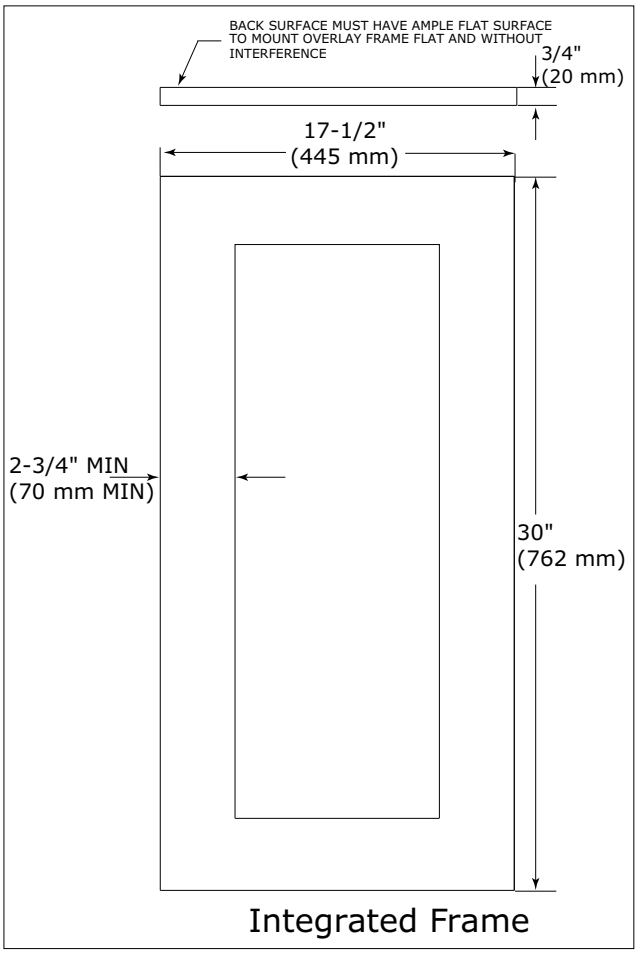

Handleless Integrated Frame

The following procedure is designed to provide a finished, handleless frame for an 18" (45 mm) door that seamlessly integrates with its surrounding cabinetry.

Note: Many cabinet manufacturers provide a ready solution for a handle-less, integrated design that can be easily applied to your U-Line 3000 Series model. Consult your cabinet manufacturer for applicable design and installation details. The cabinet manufacturer's solution to this design and integration detail will often result in an integrated frame solution wherein the size of the frame may result in a height dimension taller than what we specify. This can be achieved provided the additional height is positioned above the appliance door.

NOTICE

The integrated frame aligns with the surrounding cabinetry and, due to differences in cabinetry, may not align perfectly with the door.

The appliance will need up to 34-1/2" (876 mm) to the underside of the counter to leave room for leveling adjustments.

A single prepared frame with insert must not weigh more than 20 lbs (10 kg).

Integrated Frame Preparation

1. Cut the main panel to the dimensions below. For details, see the drawings on the next page.

Unit width	Panel width	Panel depth
18" (450 mm)	17-1/2" (445 mm)	28-13/16" (732 mm)

2. Create the top design for the handleless feature and the 1/8" (3 mm) notch for the insert(s) indicated on the appropriate Top Detail drawing, on the next page.

3. Prepare the insert(s) that will back up the handleless design. Wooden Insert – Cut 1/8" (3 mm) thick wooden insert(s) to the appropriate dimensions below.

Unit width	Insert width	Insert depth
18" (450 mm)	17-1/2" (445 mm)	3-1/2" (89 mm)

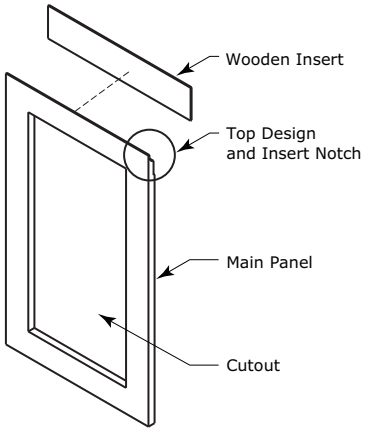

Integrated Frame

4. Optional: Stain or finish frame and wooden insert to desired stain or color. Be sure to closely follow the instructions provided by the manufacturer.

NOTICE

If finishing panel or wooden insert, all sides must be finished to prevent warping.

5. Attach the insert to the frame. Wood glue or equivalent adhesive should be used to attach insert to frame.

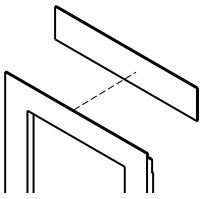

Attach Wooden Insert

Handleless Integrated Frame Dimensions

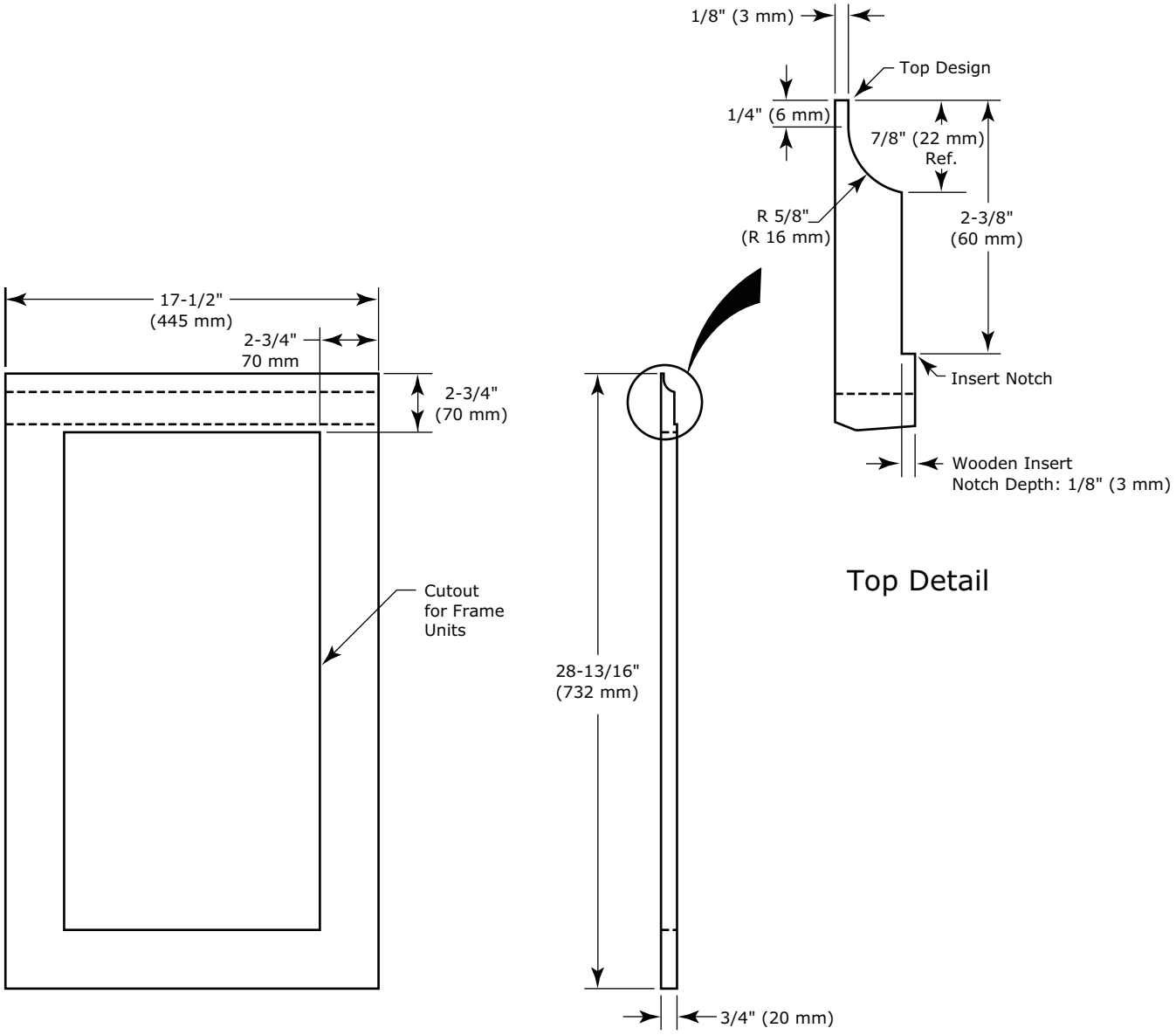

Top Detail

Wooden Insert Dimensions

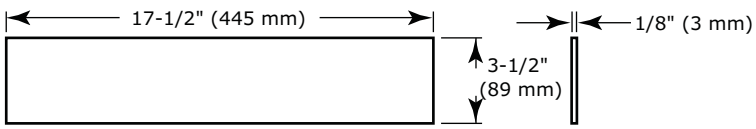

Extended Integrated Frame

NOTICE

Due to differences in surrounding cabinetry the panel may not perfectly align with door. The procedure below is designed to provide a finished panel that seamlessly integrates with surrounding cabinetry.

Panel Preparation

An extended integrated panel can be used to maintain alignment with an adjacent extended cabinet height or a reduced toe-kick/grille application.

1. Cut the panels to the dimensions listed in the diagram on the next page.

2. Optional: Stain or Finish panel to desired stain or color. Be sure to closely follow the instructions provided by the manufacturer.

3. Optional: Install handles and hardware.

NOTICE

The door panel must not weigh more than 20 lbs (10 kg).

It is important to ensure that all drilled holes are drilled to the correct depth in order to avoid splits in the wood when hardware is installed.

Appliance will need up to 34-1/2" (876.3 mm) to the under side of the counter to leave room for leveling adjustments.

When applying an integrated frame to a unit, ensure that both sides are finished in order to prevent warping. In some installations, the panel may be visible through the glass while the door is open.

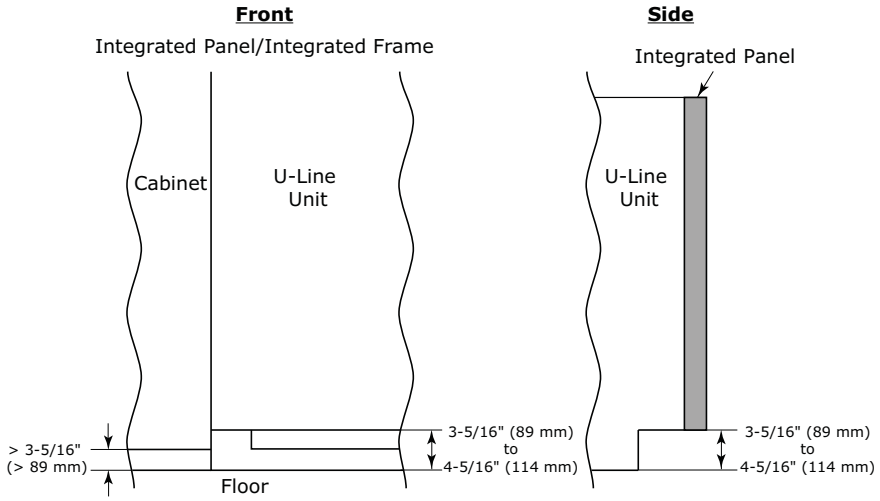

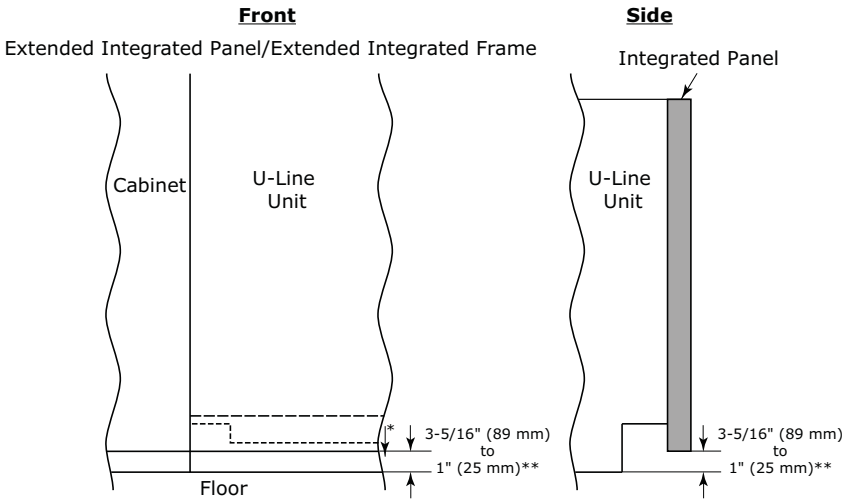

* Panel can extend beyond the door frame.

** A minimum of 1" (25 mm) from the floor is required for proper ventilation.

Extended Integrated Frame Dimensions

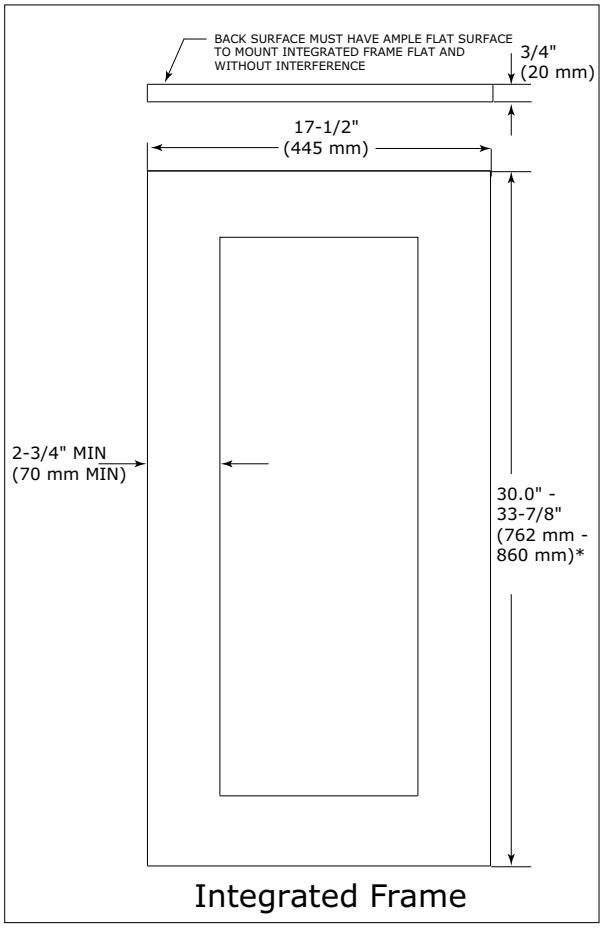

* A minimum of 1" (25 mm) is required from the floor to the bottom of the extended integrated panel/frame for proper ventilation.

NOTICE

The minimum border thickness for a 30" (762 mm) tall integrated frame is 2-3/4" (70 mm). The top/bottom border of the frame must account for any additional length.

Integrated Grille - Plinth Dimensions

PREPARE AND INSTALL INTEGRATED GRILLE (PLINTH STRIP/BASE FASCIA)

1. Use the dimensions provided in the diagram to cut and shape your integrated grille (plinth strip/base fascia) panel. Recommended panel thickness is between 1/4" (6 mm) and 3/8" (9 mm). Height will vary from 3-5/16" (84 mm) to 4-5/16" (110 mm) based on your grille (plinth strip/base fascia) height.

2. Finish or stain your grille (plinth strip/base fascia) panel to match your surrounding furniture. Finish front, back and edges to prevent warping. Carefully follow the manufacturer's recommendations for finish application and cure times.

3. Apply double sided tape to the backside of the integrated grill (plinth strip/base fascia). Use the diagram below for reference. U-Line recommends 3M™ VHB™ tape, a high strength bonding tape.

Apply Tape To Shaded Area

4. Remove backing paper from double sided tape.

5. Carefully align grille (plinth strip/base fascia) over integrated panel and press into position.

INTEGRATED GRILLE (PLINTH STRIP/BASE FASCIA) DIMENSIONS

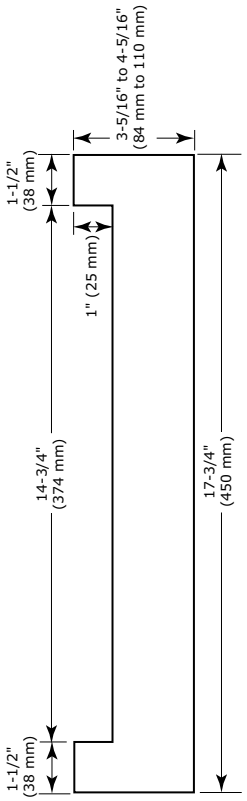

Integrated Panel Installation

1. Fully open door/drawer.
2. Starting at corner, pull gasket away from door.
3. Continue to pull gasket free from gasket channel.

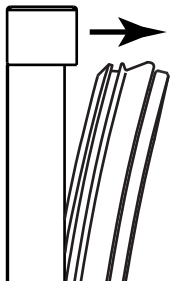

4. Upon removal, lay gasket down on a flat surface.

NOTICE

If the door/drawer houses the display, make certain the display cable remains securely seated in the inner door channel, see below.

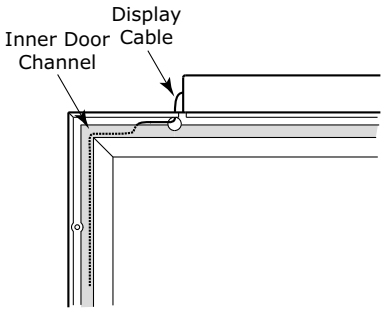

5. The panel should be aligned with the outside edge (opposite the hinge) and high enough to align with the highest point in the door/drawer.

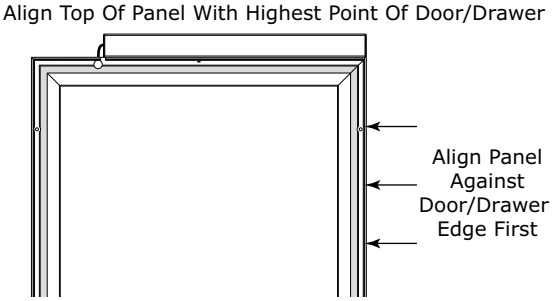

NOTICE

Due to differences in floor construction or surrounding cabinetry, the panel may not sit flush with the top of the door/drawer.

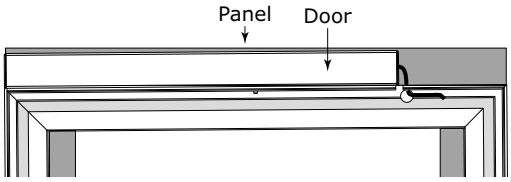

6. Secure integrated panel to door/ drawer using clamps. A robust tape may also be used. U-Line recommends the use of bar clamps to secure the panel to the door/drawer. If using tape, be certain the tape will not damage panel finish upon removal.

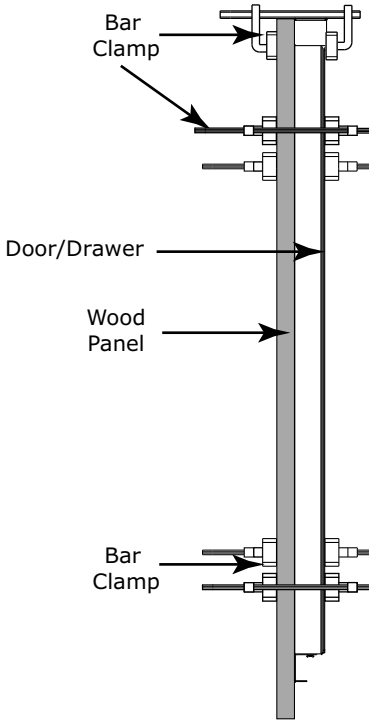

7. Using a 7/64" (3 mm) drill bit, drill 6 pilot holes into the wood panel 1/2" (12 mm) deep using the holes in the door frame as a guide.

NOTICE

It is important to ensure that all drilled holes are drilled to the correct depth in order to avoid splits in the wood when hardwood is installed.

8. Locate 6 of the #6x 1-1/2" (38 mm) screws provided with your unit.

9. Using a Phillips screwdriver, place one screw into each of the 6 pilot holes and screw down. Do not overtighten screws.

10. Be sure the screws force their way past the opening on the gasket channel and sit flush against the bottom of the channel.

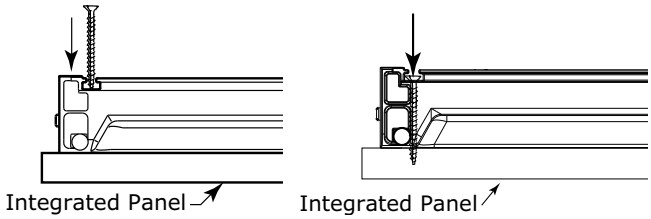

11. Remove clamps from door.

NOTICE

If panel requires additional adjustment after removing clamps, slightly loosen each screw and adjust panel as necessary. Tighten screws upon completion.

Do not overtighten screws, bulges in plastic frame might be visible if tightened too much.

12. Starting at the corners, re-install the gasket into the gasket channel in the frame. Make sure the gasket is fully seated. This may take some force.

Grille - Plinth Installation

REMOVING AND INSTALLING GRILLE (PLINTH STRIP/BASE FASCIA)

⚠ WARNING

Disconnect electrical current to the unit before removing the grille (plinth strip/base fascia).

Edges of sheet metal may be sharp.

REMOVING THE GRILLE (PLINTH STRIP/BASE FASCIA).

1. Disconnect electrical current to unit.

2. Using the included 7/64" Allen wrench, loosen, but do not remove both grille (plinth strip/base fascia) lock screws. See below.

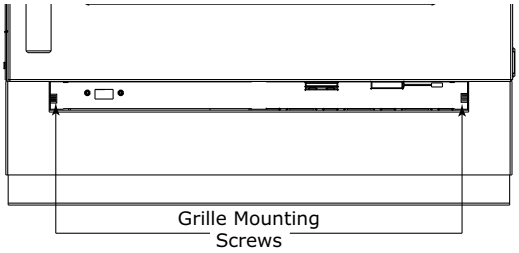

3. Gently pull grille (plinth strip/base fascia) away from unit until it stops.

4. Push grille (plinth strip/base fascia) rails towards the center of the unit to lift rails off lock screws.

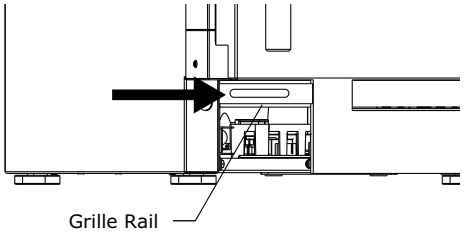

5. Pull grille (plinth strip/base fascia) free from unit.

INSTALLING THE GRILLE (PLINTH STRIP/BASE FASCIA).

1. Align slots in grille (plinth strip/base fascia) rail with screw heads in base of unit

2. Push grille (plinth strip/base fascia) rails towards the center of the unit and set rails over screw head.

3. Slide grille (plinth strip/base fascia) into position. Using included 7/64" Allen wrench tighten grille (plinth strip/base fascia) lock screws.

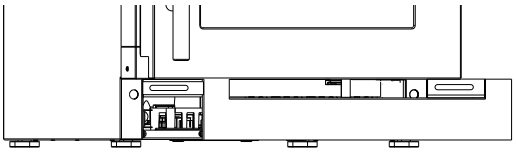

ADJUSTING GRILLE (PLINTH STRIP/BASE FASCIA)

The grille (plinth strip/base fascia) has an automatic vertical plane adjustment and can also be adjusted on its horizontal plane as well. To adjust your grille (plinth strip/base fascia) to match your surrounding furniture follow the instructions below.

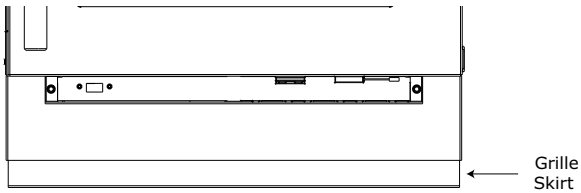

1. Loosen, but do not remove, the lock screws on the inside of the grille (plinth strip/base fascia) rails. Lock screws are located on the inside of each grille (plinth strip/base fascia) rail.

2. Pull grille (plinth strip/base fascia) out to desired position and secure lock screws.

3. The grille (plinth strip/base fascia) skirt may be manually adjusted to the height of your floor. Simply raise or lower the skirt as needed.

Door Swing

For Integrated models that are installed adjacent to a wall, 1/4" (6 mm) clearance is recommended from wall on hinge side to allow the door to open 90°. Allow for additional space for any knobs or pulls installed on the integrated panel/frame.

Stainless Steel models that are installed adjacent to a wall require 2-1/4" (57 mm) door clearance on hinge side to allow for door handle.

Units have a zero clearance when installed adjacent to cabinets.

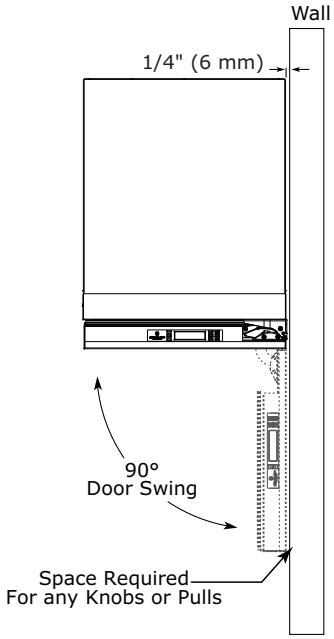

Integrated

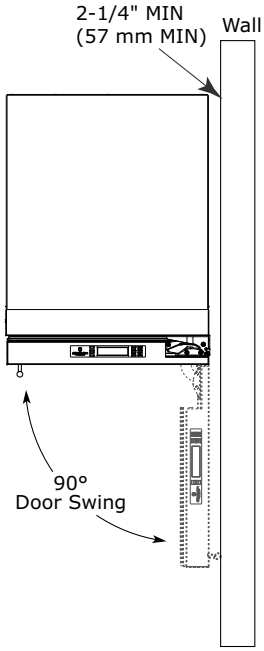

Stainless

Door Stop

Your U-Line unit was shipped to you with the optional 90° pin.

Your unit's door(s) will open 115° straight from the factory. If you would like the door stop at 90° follow these instructions:

NOTICE

If your unit is already under counter, it will need to be moved out to access the hinge. With the 90° stop pin in place, you will not be able to replace the hinge cover.

1. Open door approximately 90°.

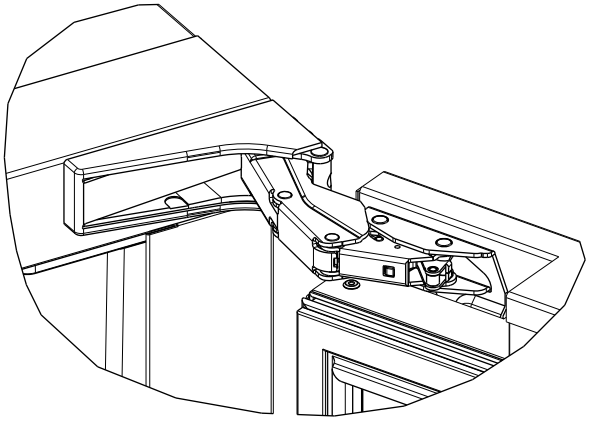

2. Remove hinge cover by lifting top and bottom of hinge cover and sliding the cover inwards to remove from hinge.

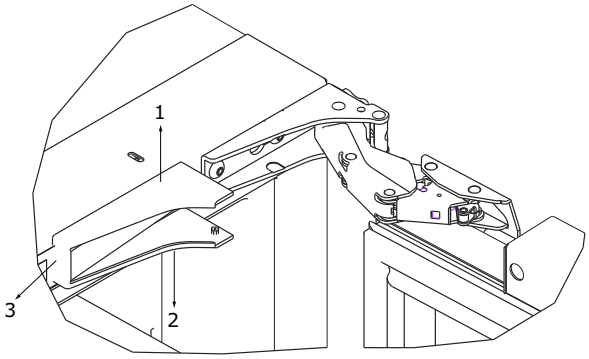

3. Once cover is removed slide hinge pin into hole as shown. Pin should slide into place stopping the door at 90°; if the pin does not go into the hole shown, hold the door less than 90° open and try again.

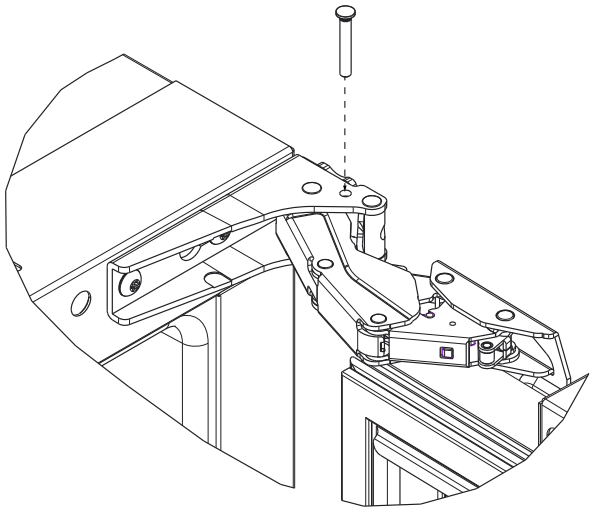

4. To fully seat the pin, tap it lightly with a hammer.

5. Carefully slide your unit back in place.

NOTICE

The pin can be removed to return the door swing back to its original 115° swing by tapping the pin out from the bottom of the hinge.

CLOSER

The door hinge has a self closing feature that engages when the door is open approximately 6" (150 mm) (about 25°).

Door Adjustments

DOOR ALIGNMENT AND ADJUSTMENT

Align and adjust the door if it is not level, or is not sealing properly. If the door is not sealed the unit may not cool properly, or excessive frost or condensation may form in the interior.

NOTICE

Properly aligned, the door's gasket should be firmly in contact with the cabinet all the way around the door (no gaps). Carefully examine the door's gasket to assure that it is firmly in contact with the cabinet. Also make sure the door gasket is not pinched on the hinge side of the door.

⚠ CAUTION

Do not attempt to use the door to raise or pivot your unit. This would put excessive stress on the hinge system.

If door being adjusted houses the display unit, remove cable from display by pressing in the release tab on the cable connector.

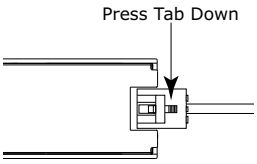

ALIGNMENT AND ADJUSTMENT

1. Remove integrated panel, if installed.
2. Using a T-25 Torx Bit, loosen each pair of Torx head screws on both the upper and lower hinge plate.
3. Square and align door as necessary.
4. Tighten Torx head screws on hinge.
5. If necessary, re-connect display.

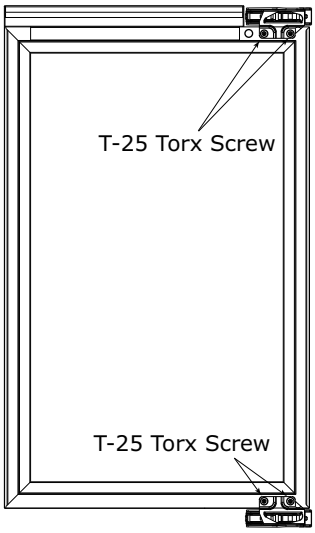

First Use

All U-Line controls are preset at the factory. Initial startup requires no adjustments.

NOTICE

U-Line recommends allowing the unit to run overnight before loading with product.

When plugged in, the unit will begin operating under the factory default setting. Follow the on screen prompt for language selection and temperature units.

To turn the unit off, press ⏻ and hold for 5 seconds and release. The display will show a countdown to switching the unit off.

To power your unit on, simply press ⏻ and the unit will immediately switch on.

Control Operation

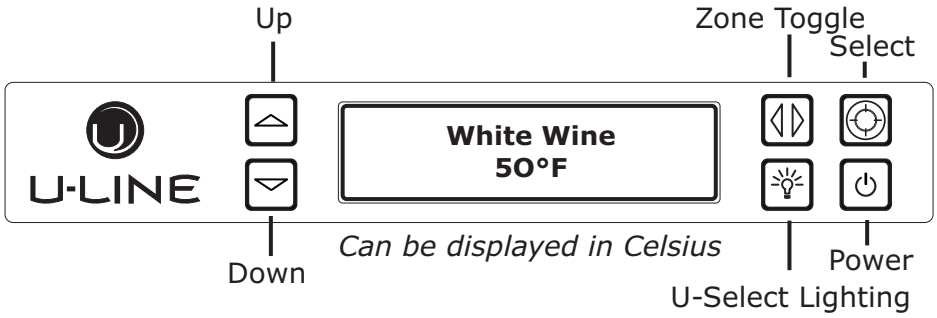

CONTROL FUNCTION GUIDE

FUNCTION	**COMMAND**	**DISPLAY/OPTIONS**
OFF	Press ⏻ and hold	Display will count down from 5 to off.
ON	Press ⏻ and release	Unit will come on immediately.
Select mode	Press ◎ and release to scroll through the modes	Press ◎ to select one of 3 modes (see table below).
Adjust temp	Press ◎ to select mode. Press ⌃ or ⌄ to set temperature.	Press ◁▷ to confirm temperature or wait 5 seconds.
Adjust lighting	Press 💡 to adjust lighting	Press ⌃ or ⌄ to set low, medium or high.
Light ON/OFF with door	Press 💡 to have light ON/OFF with door	Press 💡 and release to scroll through timer settings.
Customer menu	Press ◎ and hold for 5 seconds	Press ⌃ or ⌄ to scroll through menu.

Mode	**Set Point °F (°C)**	**Temperature Range °F (°C)**
Sparkling Wine	45 (7)	38 - 50 (3 - 10)
White Wine	50 (10)	45 - 55 (7 - 12)
Red Wine	55 (12)	55 - 65 (12 - 18)

U-SELECT® CONTROL

Digital Display

The 3000 Series units are controlled by a feature rich, advanced OLED display control unit. The control panel allows adjustment to temperature set point, access to Energy Saver Mode, internal temperature readings, and many other features.

Zone Control

Your model has a single control module for both zones. Each side of the control refers to a specific zone. See below.

Adjusting Temperature Settings

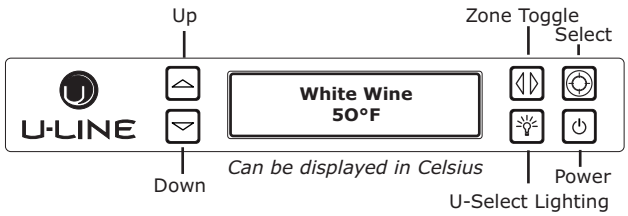

Each zone has a series of Mode Settings with a default value for each setting. Each Mode Setting can be further customized by fine tuning the temperature set point. See the chart below for a description of each mode and mode temperature ranges. Mode selection will vary by model.

Mode Settings Chart

Setting	Default °F (°C)	Range °F (°C)
Sparkling Wine	45 (7)	38 - 50 (3 - 10)
White Wine	50 (10)	45 - 55 (7 - 12)
Red Wine	55 (12)	55 - 65 (12 - 18)

Quick Chill

⚠ CAUTION

Quick chill is designed to quickly pull warm beverages and foods down to optimum storage temperature. It is important to only initiate quick chill modes when the unit has been fully loaded with warm product. Failure to follow this notice could result in food or beverages that are cooled to a point below optimum or frozen.

The following chart lists modes which include the quick chill feature and the time which quick chill will run.

Mode	Run Time
Sparkling Wine	1 Hour
White Wine	1 Hour
Red Wine	Not Available

To initiate quick chill:

1. Press ◎ to select the desired mode setting.

2. Press ▽ until the temperature set point reads “Quick”.

The quick chill feature will then begin for the period of time dictated by the mode type. To cancel quick chill, simply select a set point other then “quick”.

INTERIOR LIGHTING

Your U-Line 3000 Series unit uses a state of the art LED lighting system.

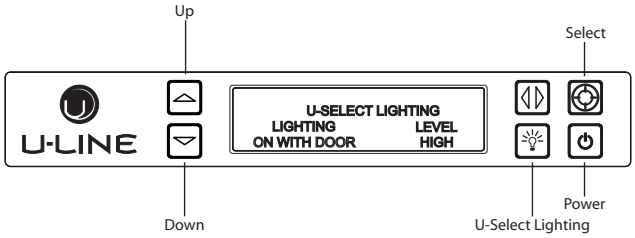

1. To begin, press to enter the lighting menu.

2. Press or to cycle through each available brightness setting (Low, Medium or High).

3. Press to cycle through each available timer setting. Selections include “On With Door”, “On 3 Hours”, “On 6 Hours”, or “On 24 Hours”.

4. To exit, press or simply wait for the menu to time out.

ERROR NOTIFICATION

The 3000 model series continuously monitors a series of inputs and parameters to ensure proper and efficient operation of your unit. Should the system detect a fault, an error notification will be displayed on the user interface. See below for a list of errors.

NOTE: Singe zone models will not use (L) left or (R) right zone indicators in error notification.

ID	Description	Solution
No Comm	Unit lost communication to the display.	Disconnect and reconnect power to unit. Contact Customer Care if persistent.
(L) (R) Zone T Open	Left or right zone thermistor circuit open.	Contact Customer Care.
Amb Thrm Open	Ambient thermistor circuit open.	Contact Customer Care.
(L) (R) Zone T Short	Left or right zone thermistor circuit shorted.	Contact Customer Care.
Amb Thrm Short	Ambient thermistor circuit shorted.	Contact Customer Care.
(L) (R) Temp Hi 6H+	Left or right zone temperature +10° over set point for over 6 hours.	Verify door is closed and sealing. Contact Customer Care if persistent.
(L) (R) Temp Hi 12H+	Left or right zone temperature +10° over set point for over 12 hours.	Verify door is closed and sealing. Contact Customer Care if persistent.
(L) (R) Temp Lo 6H+	Left or right zone temperature -10° under set point for over 6 hours.	Verify door is closed and sealing. Contact Customer Care if persistent.
(L) (R) Temp Lo 12H+	Left or right zone temperature -10° under set point for over 12 hours.	Verify door is closed and sealing. Contact Customer Care if persistent.
(L) (R) Door Open 5M	Left or right door switch open for more then 5 minutes.	Verify door is closed and sealing. Contact Customer Care if persistent.

CUSTOMER MENU

The 3000 Series of U-Line under counter refrigeration appliances contains a feature rich customer menu. The Customer Menu allows access to a series of advanced features including Energy Saver Mode, Sabbath Mode, actual temperature readings as well a method to restore factory defaults.

3000 SERIES - CUSTOMER MENU

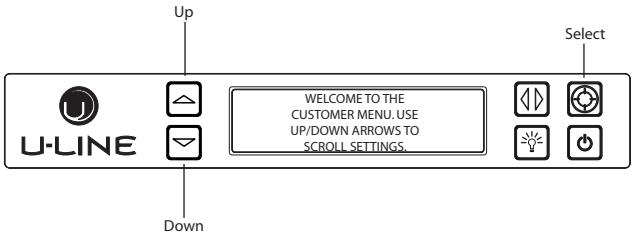

1. To access the Customer Menu hold for 5 seconds.

2. Press or to scroll through available selections.

3. Press to enter selected sub-menu.

4. To exit Customer Menu, press ▽ to scroll to the bottom of the display and press ◎ to select "Exit".

Actual Temps

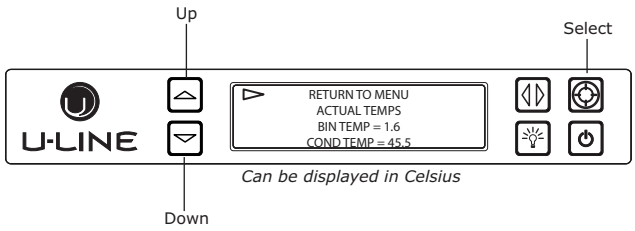

The Actual Temps option displays the actual temperature of each zone and evaporator, as well as ambient temperature.

1. To view actual temperature, press ◎ and select "Actual Temps" from the Customer Menu.

2. Press △ or ▽ to scroll through available information.

3. To return to the Customer Menu, press ◎ and select "Return to Menu".

Energy Saver Mode

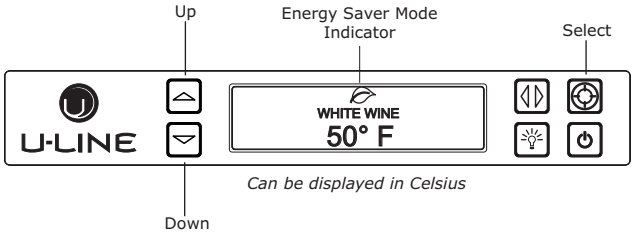

Energy Saver mode reduces overall energy consumption by altering user set point, differential, lighting and tone settings. When in Energy Saver Mode a small leaf icon will be displayed on the main screen.

1. To enter Energy Saver Mode, first select Energy Saver from the Customer Menu.

2. Press ▽ to select "Off" in the menu.

3. Press ◎.

4. Press △ or ▽ to change the selection from Off to On.

5. Press ◎ to confirm your selection.

6. To return to the Customer Menu, press ◎.

7. To cancel Energy Saver Mode simply return to the Customer Menu, select Energy Saver and change "On" to "Off".

Languages

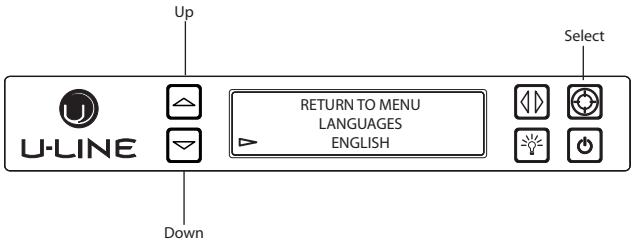

The U-Line 3000 Series of models supports a number of display languages including English, Spanish, French, Italian and German.

1. To change display language select Languages from the Customer Menu.

2. Press ▽ to select "English".

3. Press ◎. "English" will begin to flash.

4. Press △ or ▽ to cycle through the available languages.

5. Press ◎ to confirm your choice.

Sound Level

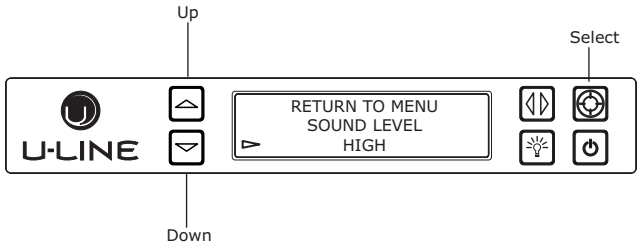

Audible alarms and alert tones support four different Sound Level settings, High, Medium, Low, and Off.

To select a new sound level, enter the Sound Level Menu from the Customer Menu.

1. Press ▽ to select the current sound level.

2. Press ◎. The current setting will begin to flash.

3. Press △ or ▽ to select a different level.

4. Press ◎ to confirm your choice.

Fahrenheit/Celsius

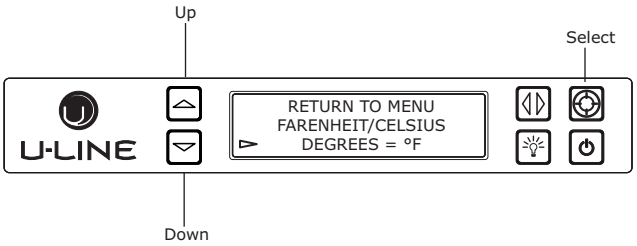

Temperature and set point information can be displayed in either Fahrenheit or Celsius.

To change from Fahrenheit to Celsius enter the Fahrenheit/Celsius Menu from within the Customer Menu.

1. Press ▽ to select “Degrees”.

2. Press ◎. The selection will begin to flash.

3. Press △ or ▽ to select between °F (Fahrenheit) or °C (Celsius).

4. Press ◎ to confirm your choice.

Factory Default

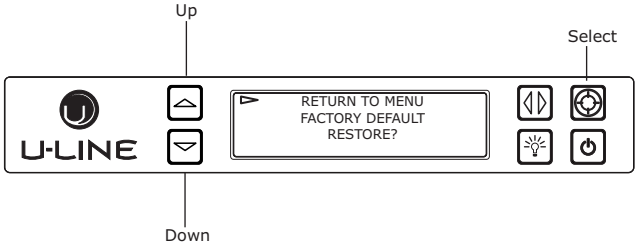

Factory Default will restore all settings to their factory default.

To access Factory Default:

1. Press ▽ to select “Factory Default”.

2. Press ◎.

To restore settings to their factory default:

3. Press ▽ to select “Restore?” and press ◎.

4. “Restore?” will change to “Restoring...” while settings are restored. When restoration is complete, “Restoring...” will return to “Restore?”.

To exit Factory Default, press △ to select “Return to Menu” and press ◎ to confirm.

Help

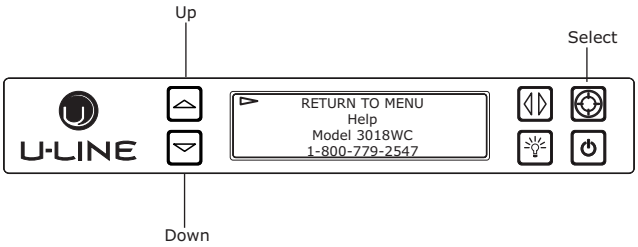

To access the Help Menu, select “Help” from the Customer Menu. Press ⌃ or ⌄ to scroll through available information. The Help screen displays the following:

- Model.
- U-Line contact information.
- Software version.
- Serial Number.

To exit the Help Menu, press ⌃ to select “Return to Menu” and press ◎ to confirm.

Sabbath Mode

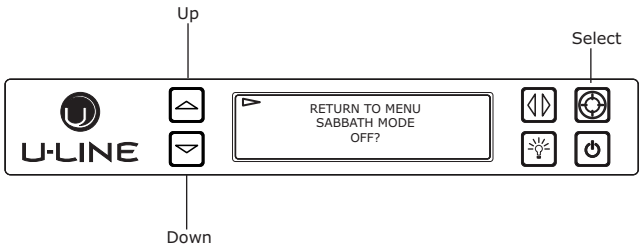

This unit offers a Sabbath mode for users who require this functionality during Sabbaths. Sabbath mode disables system responses to user initiated activities and all external functions; including lighting, display and audible alarms. The unit will still maintain internal temperatures and set points.

To enable Sabbath Mode:

1. Open the unit's door to activate the display.
2. To access the Customer Menu hold ◎ for 5 seconds.
3. Press ⌃ or ⌄ to scroll through available selections.
4. Select Sabbath Mode from the Customer Menu by pressing ◎.
5. Press ⌄ to select "Off".
6. Press ◎, "Off" will begin to flash.
7. Press ⌃ or ⌄ to change "Off" to "On".
8. Press ◎ to confirm your selection.

The Display will fade out as the unit enters Sabbath Mode. Sabbath

Mode remains active until ⏻ is quickly pressed and released.

Airflow and Product Loading

NOTICE

The unit requires proper airflow to perform at its highest efficiency. Do not block the front grille, internal fans or vents at any time, or the unit will not perform as expected. When loading your unit, leave space between the internal fans or vents and product loaded. Anything blocking the required airflow/circulation will result in uneven temperature distribution in the cabinet and can also freeze product. Do not install the unit behind a door.

When properly loaded, your U-Line unit will store up to 31 (750 ml) bottles of wine.

Door Removed For Illustration Purposes

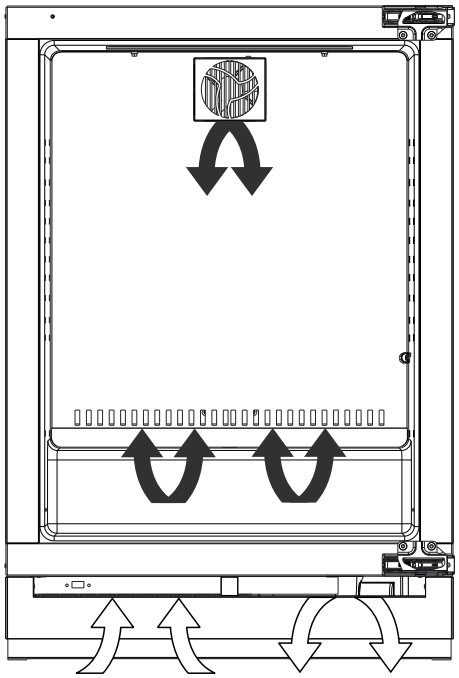

Internal Air Flow And Unit Ventilation Diagram

U-Line Wine Guide

LOOKING BEHIND THE LABEL

To most, wine is a delicious mystery. We purchase it, uncork it, and savor its taste and beauty. But there is so much more to true wine appreciation. Many secrets are simply too good to keep bottled up.

WINE SELECTIONS SUGGESTIONS

Selecting the right wine for the right occasion can sometimes be a seemingly awkward or difficult task for the beginning wine enthusiast. We would therefore like to present you with a few suggestions which may provide a little more confidence and enjoyment when choosing and serving your wines.

When selecting wines, keep an open mind and do not be afraid to be adventurous. Do not view the subject of wine so seriously it discourages you from learning and discovering for fear of embarrassment if something is incorrect. Wine is best viewed as a hobby and enjoyed.

When assembling your collection, try not to become obsessed with "Vintages." Although a chart can be a useful tool, generalizations about a specific year have led more than one collector to disappointment. Often an "Off Year" will provide a better value and more drinking enjoyment.

The primary guideline to the subject of wine is your own palate. Do not be afraid to make mistakes. Experiment, discover, but most of all, enjoy yourself and your new U-Line product.

Guide To Common Styles Of Wine

Red Wines		
Full-Bodied Dry	California French Italian	Zinfandel, Cabernet Rhone, Chateauneuf-du-Pape Barbaresco, Barolo
Medium-Bodied Dry	California French	Pinot Noir Bordeaux, Burgundy
Light-Bodied Dry	French Italian	Beaujolais Chianti, Bardolino
White Wines		
Full-Bodied Dry	California French	Chardonnay Montrachet, Meursault Puligny-Montrachet
Medium-Bodied Dry	California French	Sauvignon-Blanc Pouilly-Fuisse, Sancerre, Vouvray, Graves
Light-Bodied Dry	French	Chablis, Muscadet, Pouilly-Fume
Full-Bodied, Very Sweet	Germany French Hungary	Beerenauslese Sauternes Tokay
Medium-Bodied, Semi-Sweet	California Germany	Gewurtztraminer Liebfraumilch
Light-Bodied Off Dry	Germany	Rhine, Mosel, Riesling

Matching Food and Wine

Although there are no hard fast rules for matching wine to food, observe some guidelines. Delicate dishes should be accompanied by lighter more delicate wines. Full-flavored foods should be matched with fuller-bodied wines.

As a general rule, one should aim to ascend in flavor and quality of wines served.

Serve a:	Before a:
DRY wine	SWEET wine
WHITE wine	RED wine
YOUNG wine	OLD wine
LIGHT-BODIED wine	FULL-BODIED wine

Any step back in quality will be noticed. If a fine wine is tasted prior to a lesser wine, many of the fine wine's subtle qualities may be missed.

Common Food and Wine Matches

Foods	Wines
Fish, Shell Fish, Crab, Oysters	Dry White Wines, Light Sparkling or Extra Dry Champagne
Beef, Venison	Full-Bodied Red Wines
Pork, Veal, Lamb and Poultry	Light-Bodied Red Wines
Fruit	Sweet White and Sparkling Wines

A Toast to Wine Truths

Like the grapes themselves, many wine myths have been cultivated over the centuries.

Myth 1: Most wines taste better when aged.

Truth: In fact, less than 5% of wines produced today are meant to be aged. Most wines are crafted to be consumed within the first one to two years.

Myth 2: Wines should be uncorked and decanted allowing them to "breathe."

Truth: To breathe or not breathe? While it is better to allow a young tannic Red to breathe in a glass or decanter to soften the tannins, an old Red reaches a stage in its life where it should be enjoyed soon after opening. Allow an old Red to breathe for a short time to dissipate any off odors. Most white wines can be served, ideally, 10-15 minutes after opening.

Myth 3: When age worthy wines peak, they must be consumed almost immediately.

Truth: Most great wines reach a plateau period rather than a peak. Great Bordeaux's may have as much as a 10-year plateau before fading.

Myth 4: Wine color does not change with aging.

Truth: As red wines age they get lighter in color while whites get darker.

The Cork: A Mystery on Its Own

Cork Presentation. The ritual of the presentation of the cork has a rich and fascinating history dating back to the late 1800's. A phylloxera (root louse) devastation to the vineyards severely limited the supply of great wines. Restaurateurs would remove labels on inferior wines and replace them with labels from superior wines. This made it necessary for patrons to protect themselves by checking the branding on the cork to ensure that what they ordered was, in fact, what they were served.

When presented with a cork today, feel it to check for its integrity, read and match the branding on the cork to the bottle and set it aside. There is little to be learned from the cork. The proof is in the wine.

"Corked" wines. If you've ever had a wine that smelled or tasted of mold, you've experienced a wine that may have been "corked." Today, between five and eight percent of wines are tainted with Trichloroanisole (TCA). This substance, found naturally in plants and trees, is imparted to the wine through the cork. Corked wines are a major concern for winemakers as it destroys millions of cases per year and puts reputations at stake. Amazing as it may seem twist-off caps may offer a better alternative and many great wineries in California, Australia and New Zealand are pioneering the trend.

Common Tasting Terms

Terminology	Description
Acidity	A critical element of wine that is responsible for preserving the wines freshness. Excess acidity results in an overly tart and sour wine.
Balance	A desired trait where tannin, fruit and acidity are in total harmony. Wines with good balance tend to age gracefully.
Body	The weight and presence of wine in the mouth provided by the alcohol and tannin level. Full-bodied wines tend to have this strong concentration.
Bouquet	The blending of a wine's aroma within the bottle over a period of time, caused by volatile acidity.
Complex	A subjective term often used in tasting. A wine is said to be complex if it offers a variety of flavors and scents that continue to evolve as it develops.
Flabby	A wine that lacks structure, or is heavy to the taste, lacks acidity.
Full-Bodied	Wine high in alcohol and extract, generally speaking, fills the mouth, powerful.
Lean	Generally describes wines that are slim, lacking of generosity or thin.
Oaky	A desirable flavor imparted to wine if done in moderation. Most wines are aged in oak barrels one to three years, thereby receiving this toasty oak characteristic. However, if a weak wine is left in contact too long with an oak barrel it will tend to be overpowered with an oaky taste.
Tannin	Tannins are extracted from the grape skins and stems and are necessary for a well-balanced red wine. Tannins are easily identified in wine tasting as the drying sensation over the gums. Tannins generally fade as a wine ages.

IDEAL WINE STORAGE CONSIDERATIONS

Temperature: The most important element about storage temperature is stability. If wine is kept in a stable environment between 40°F (7°C) and 65°F (21°C), it will remain sound. A small 1-2 degree temperature fluctuation within a stable environment is acceptable. Larger temperature fluctuations can affect the corks ability to seal, allowing the wine to "leak" from the bottle.

Humidity: The traditional view on humidity maintains that wines should be stored on their sides in 50% - 80% relative humidity to ensure cork moisture and proper fit in the bottle. Contemporary wisdom suggests that the cork surface is too small to be impacted by humidity. Further the cork is sealed with a metal or wax capsule making humidity penetration impossible. The concept of a humid storage environment was derived from the necessity of wineries to maintain moisture in their cellars to keep wooden barrel staves swollen, preventing wine evaporation and product loss. In fact, vineyards estimate as much as a 10% product loss per year due to evaporation while wine is aging in the wooden barrels. Humidity, however, was not intended for the modern home cellar where wine is stored in glass bottles with sealed corks.

Light: UV rays are not only harmful to people, they are damaging to wines - especially those in clear bottles. Since oxygen molecules in wine absorb UV rays, wine should never be stored in direct light for long periods of time.

Vibration: Provided that sediment is left undistributed and particles are not suspended, vibration in a storage environment is not an issue. Wines can become flat or tired when voids and vacuums are created inside the wine bottle. In order to create voids and vacuums within a liquid, aggressive motion or shaking of the wine bottle would have to occur.

The Right Temperature for Wine

Temperature	Wines
Approximately 60°F (15°C)	Red
50°F - 55°F (10°C -12°C)	White
Approximately 45°F (7°C)	Sparkling

Wine Captain® Models - A Touch of Elegance

In 1985 U-Line was the first North American appliance manufacturer to develop a residential wine storage unit, the Wine Captain®. Each U-Line Wine Captain® model is designed to impress and inspire anyone with an interest in wine by providing cellar conditions in stylish, undercounter units. U-Line Wine Captain® models offer stable storage temperatures, a 50% internal relative humidity and protection from UV light rays. U-Line has the largest product offering available, making storing, presenting, and sharing your wine effortless and elegant.

Recommended Wine Storage

Specially designed horizontal wine racks properly position the bottles so the wine remains in contact with the cork, which ensures the cork does not become dry.

U-Line recommends arranging wine bottles as shown in the illustrations below.

Racks 1 through 5:

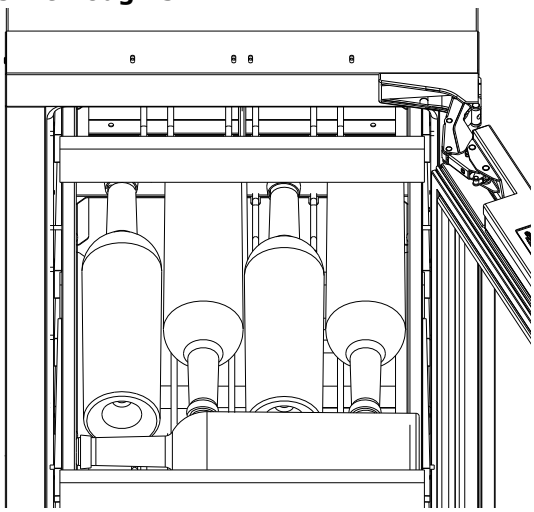

Rack 6:

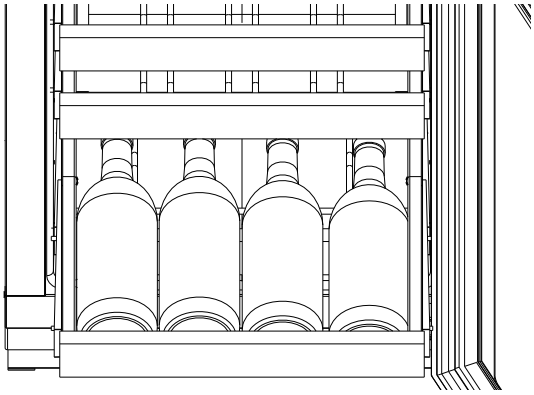

Rack 7:

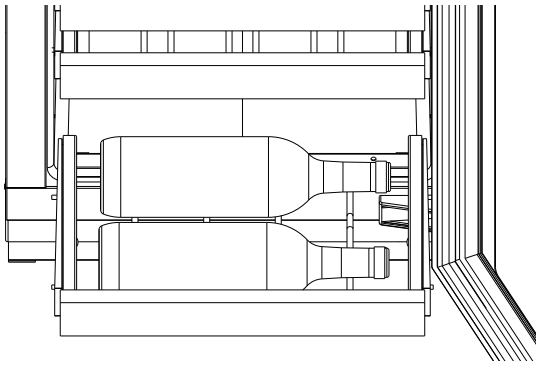

Larger diameter bottles may be stored on the shaded racks, illustrated below.

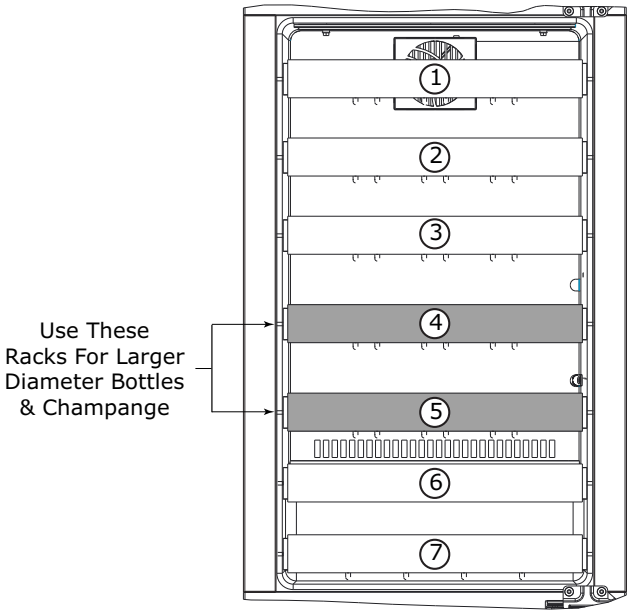

NOTE: After stocking, allow unit to stabilize product temperatures for 24 hours.

Cleaning

EXTERIOR CLEANING

Stainless Models

Stainless door panels and handles can discolor when exposed to chlorine gas, pool chemicals, saltwater or cleaners with bleach.

Keep your stainless unit looking new by cleaning with a good quality all-in-one stainless steel cleaner and polish monthly. For best results use Claire® Stainless Steel Polish and Cleaner, which can be purchased from U-Line Corporation (Part Number 173348). Comparable products are acceptable. Frequent cleaning will remove surface contamination that could lead to rust. Some installations may require cleaning weekly.

Do not clean with steel wool pads.

Do not use stainless steel cleaners or polishes on any glass surfaces.

Clean any glass surfaces with a non-chlorine glass cleaner.

Do not use cleaners not specifically intended for stainless steel on stainless steel surfaces (this includes glass, tile and counter cleaners).

If any surface discoloring or rusting appears, clean it quickly with Bon-Ami® or Barkeepers Friend Cleanser® and a nonabrasive cloth. Always clean with the grain. Always finish with Claire Stainless Steel Polish and Cleaner or comparable product to prevent further problems.

Using abrasive pads such as Scotchbrite™ will cause the graining in the stainless steel to become blurred.

Rust not cleaned up promptly can penetrate the surface of the stainless steel and complete removal of the rust may not be possible.

Integrated Models

To clean integrated panels, use household cleaner per the cabinet manufacturer's recommendation.

INTERIOR CLEANING

Disconnect power to the unit.

Clean the interior and all removed components using a mild nonabrasive detergent and warm water solution applied with a soft sponge or non-abrasive cloth.

Rinse the interior using a soft sponge and clean water.

Do not use any solvent-based or abrasive cleaners. These types of cleaners may transfer taste to the interior products and damage or discolor the lining.

DEFROSTING

Minor frost on the rear wall or visible through the evaporator plate vents is normal and will melt during each off cycle. If there is excessive build-up of 1/4" (6 mm) or more, manually defrost the unit.

Ensure the door is closing and sealing properly.

High ambient temperature and excessive humidity can also produce frost.

⚠ CAUTION

DO NOT use an ice pick or other sharp instrument to help speed up defrosting. These instruments can puncture the inner lining or damage the cooling unit. DO NOT use any type of heater to defrost. Using a heater to speed up defrosting can cause personal injury and damage to the inner lining.

NOTICE

The drain pan was not designed to capture the water created when manually defrosting. To prevent water from overflowing the drain pan and possibly damaging water sensitive flooring, the unit must be removed from cabinetry.

To defrost:

1. Disconnect power to the unit.
2. Remove all products from the interior.
3. Prop the door in an open position (2 in. [50 mm] minimum).
4. Allow the frost to melt naturally.
5. After the frost melts completely clean the interior and all removed components. (See INTERIOR CLEANING).
6. When the interior is dry, reconnect power and turn unit on.

Cleaning Condenser

INTERVAL - EVERY SIX MONTHS

To maintain operational efficiency, keep the front grille (plinth strip/base fascia) free of dust and lint, and clean the condenser when necessary. Depending on environmental conditions, more or less frequent cleaning may be necessary.

⚠ WARNING

Disconnect electric current to the unit before cleaning the condenser.

NOTICE

DO NOT use any type of cleaner on the condenser unit. Condenser may be cleaned using a vacuum, soft brush or compressed air.

1. Remove the grille (plinth strip/base fascia). (See GRILLE-PLINTH INSTALLATION).

2. Clean the condenser coil using a soft brush or vacuum cleaner.

3. Install the grille (plinth strip/base fascia).

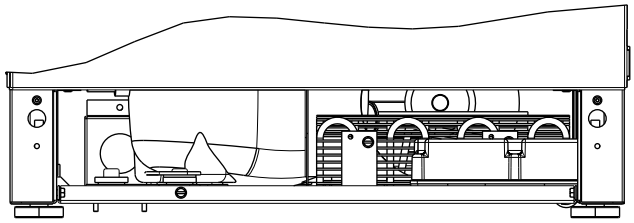

Wine Rack Installation

To remove wine racks for cleaning:

1. Remove any bottles stored on the rack.

2. Grasp the end of the rack and gently slide it out until it stops.

3. The release levers are located on the inside of the rack rails. Press the left rack release lever down. At the same time, lift the matching right rack release lever up. Pull the rack out until it is free of the tracks and the cabinet.

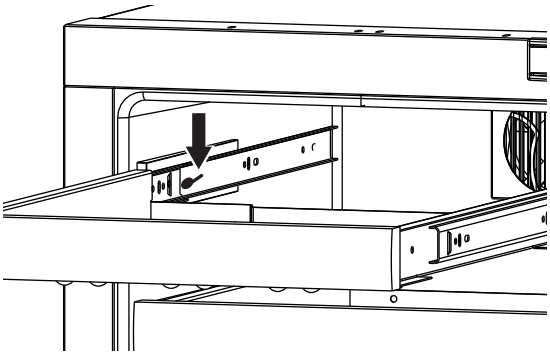

NOTICE

Do not remove the track rails from the cabinet.

To insert wine racks in the cabinet:

1. Align the left and right rack channels with the tracks in the cabinet. Ensure an even track engagement on both sides by gently pushing the rack into the cabinet until it stops.

2. Before reloading the rack, ensure proper movement of the travel stops in the left and right track rails by pulling the rack out gently until it stops.

To clean wine racks:

1. Saturate a soft cloth with a soapy, warm water solution.

2. Wring excess water from cloth and wipe racks down.

NOTICE

The wine racks are greased. This white lithium grease helps provide smooth operation of the slide mechanism. It is important not to remove grease.

Extended Non-Use

VACATION/HOLIDAY, PROLONGED SHUTDOWN

The following steps are recommended for periods of extended non-use:

1. Remove all consumable content from the unit.

2. Disconnect the power cord from its outlet/socket and leave it disconnected until the unit is returned to service.

3. If ice is on the evaporator, allow ice to thaw naturally.

4. Clean and dry the interior of the unit. Ensure all water has been removed from the unit.

5. The door must remain open to prevent formation of mold and mildew. Open door a minimum of 2" (50 mm) to provide the necessary ventilation.

WINTERIZATION

If the unit will be exposed to temperatures of 40°F (5°C) or less the steps above must be followed.

For questions regarding winterization please call U-Line at 1.800.779.2547.

⚠ CAUTION

Damage caused by freezing temperatures is not covered by the warranty.

Accessories

23054-01

Accessories - Stainless Steel
PRO Style Door Handle,
1-1/4" in diameter
US$49.00

Troubleshooting

BEFORE CALLING FOR SERVICE

If you think your U-Line product is malfunctioning, read the OPERATING INSTRUCTIONS sections below to understand clearly the function of the control.

If the problem persists, read the NORMAL OPERATING SOUNDS and TROUBLESHOOTING GUIDE sections below to help you quickly identify common problems, and possible causes and remedies. Most often, this will resolve the problem without the need to call for service.

IF SERVICE IS REQUIRED

If you do not understand a troubleshooting remedy, or your product needs service, contact U-Line Corporation directly. Contact information appears on the rear cover of this guide.

When you call, you will need your product Model and Serial Numbers. This information appears on the Model and Serial number plate located on the interior of your product or can be accessed through “Help” in the Customer Menu.

NORMAL OPERATING SOUNDS

All models incorporate rigid foam insulated cabinets to provide high thermal efficiency and maximum sound reduction for its internal working components. Despite this technology, your model may make sounds that are unfamiliar.

Normal operating sounds may be more noticeable because of the unit’s environment. Hard surfaces such as cabinets, wood, vinyl or tiled floors and paneled walls have a tendency to reflect normal appliance operating noises.

Listed below are common refrigeration components with brief description of the normal operating sounds they make. NOTE: Your product may not contain all the components listed.

- Compressor: The compressor makes a hum or pulsing sound that may be heard when it operates.
- Evaporator: Refrigerant flowing through an evaporator may sound like boiling liquid.
- Condenser Fan: Air moving through a condenser may be heard.
- Automatic Defrost Drain Pan: Water may be heard dripping or running into the drain pan when the unit is in the defrost cycle.
- Solenoid Valves: An occasional clicking sound may be heard as solenoid valves are operated.

TROUBLESHOOTING GUIDE

⚠ DANGER

ELECTROCUTION HAZARD. Never attempt to repair or perform maintenance on the unit until disconnecting the main electrical power.

Troubleshooting - What to check when problems occur:

Problem	Possible Cause and Remedy
Digital Display and Light Do Not Work.	Ensure power is connected to the unit. If the unit is cooling, it may be in Sabbath mode. (See OPERATING INSTRUCTIONS)
Interior Light Does Not Illuminate.	If the unit is cooling it may be in Sabbath mode, or manually set to off. (See OPERATING INSTRUCTIONS)
Light Remains on When Door is Closed.	Lighting may be set to On, reset to with door. (See OPERATING INSTRUCTIONS)
Unit Develops Frost on Internal Surfaces.	Frost on the rear wall is normal and will melt during each off cycle. If there is excessive build-up of 1/4” or more, manually defrost the unit. Ensure the door is closing and sealing properly. High ambient temperature and excessive humidity can also produce frost.
Unit Develops Condensation on External surfaces	The unit is exposed to excessive humidity, moisture will dissipate as humidity levels increase.

Problem	**Possible Cause and Remedy**
Digital Display Functions, But Unit Does Not Cool.	Ensure the unit is not in 'Showroom Mode'. Press and hold the Power icon for five seconds to exit Showroom mode. Press the power button again to resume normal operation.
Digital Display Shows an Error.	"Door" indicates the door may be opened too long, ensure the door is closing properly. For other error codes contact U-Line Customer Service.
Product is Freezing.	Product in contact with the rear wall may freeze, ensure no product is touching the rear wall. Adjust the temperature to a warmer set-point. (See OPERATING INSTRUCTIONS)
Product is Not Cold Enough.	Air temperature does not indicate product temperature. Adjust the temperate to a cooler set-point. (See OPERATING INSTRUCTIONS) Ensure unit is not located in excessive ambient temperatures or in direct sunlight. Ensure the door is closing and sealing properly. Ensure nothing is blocking the front grille, found at the bottom of the unit. Ensure the condenser coil is clean and free of any dirt or lint build-up.

ERROR NOTIFICATION

The 3000 model series continuously monitors a series of inputs and parameters to ensure proper and efficient operation of your unit. Should the system detect a fault, an error notification will be displayed on the user interface. See below for a list of errors

NOTE: Single zone models will not use (L) left or (R) right zone indicators in error notification.

ID	**Description**	**Solution**
No Comm	Unit lost communication to the display.	Disconnect and reconnect power to unit. Contact customer care if persistent.
(L) (R) Zone T Open	Left or right zone thermistor circuit open.	Contact Customer Care.
Amb Thrm Open	Ambient thermistor circuit open.	Contact Customer Care.
(L) (R) Zone T Short	Left or right zone thermistor circuit shorted.	Contact Customer Care.
Amb Thrm Short	Ambient thermistor circuit shorted.	Contact Customer Care.
(L) (R) Temp Hi 6H+	Left or right Zone temperature +10° over set point for over 6 hours.	Verify door is closed and sealing. Contact customer care if persistent.
(L) (R) Temp Hi 12H+	Zone temperature +10° over set point for over 12 hours.	Verify door is closed and sealing. Contact customer care if persistent.
(L) (R) Temp Lo 6H+	Zone temperature -10° under set point for over 6 hours.	Verify door is closed and sealing. Contact customer care if persistent.
(L) (R) Temp Lo 12H+	Zone temperature -10° under set point for over 12 hours.	Verify door is closed and sealing. Contact customer care if persistent.
(L) (R) Door Open 5M	Door switch open for more then 5 minutes.	Verify door is closed and sealing. Contact customer care if persistent.

CHECKING PRODUCT TEMPERATURE

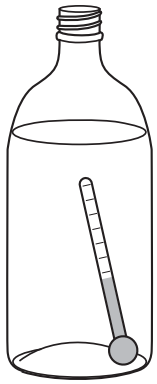

To check the actual product temperature in the unit.

1. Partially fill a plastic (nonbreakable) bottle with water.
2. Insert an accurate thermometer.
3. Tighten the bottle cap securely.
4. Place the bottle in the desired area for 24 hours.
5. Avoid opening the unit during the testing period.

6. After 24 hours, check the temperature of the water. If required, adjust the temperature control in a small increment (See CONTROL OPERATION).

Causes which affect the internal temperatures of the cabinet include:

- Temperature setting.
- Ambient temperature where installed.
- Installation in direct sunlight or near a heat source.
- The number of door openings and the time the door is open.
- The time the internal light is illuminated. (This mainly affects product on the top rack or shelf.)
- The front grille or condenser are obstructed.

Warranty

U-LINE CORPORATION LIMITED WARRANTY

1. U-Line Corporation ("U-Line") warrants each U-Line product to be free from defects in materials and workmanship for a period of one year (two years on Modular 3000 Series) from the date of purchase. U-Line further warrants the sealed system (consisting of the compressor, condenser, evaporator, hot gas bypass valve, dryer, and connecting tube) in each U-Line product to be free from defects in materials and workmanship for a period of five years from the date of purchase.

2. During the initial one year warranty period (two years on Modular 3000 Series) for all U-Line products U-Line shall: (1) repair any product or replace any part of a product; and (2) for all Marine, RV and Domestic U-Line products sold and serviced in the United States (including Alaska and Hawaii) and Canada, U-Line shall be responsible for the labor costs performed by a U-Line authorized service company, incurred in connection with the replacement of any defective part. During years two through five of the warranty period for the sealed system, U-Line shall: (1) at U-Line's option repair or replace any part of the sealed system; and (2) for all Marine, RV and Domestic U-Line products sold and serviced in the United States (including Alaska and Hawaii) and Canada, U-Line shall be responsible for the labor costs incurred in connection with the replacement of any defective part of the sealed system. All other charges, including transportation charges for replacements under this warranty and labor costs not specifically covered by this warranty, shall be the responsibility of the purchaser. This warranty extends only to the original purchaser of the U-Line product. The Product Registration Card included with the product should be promptly completed by you and mailed back to U-Line or you can register on-line at www.u-lineservice.com.

3. The warranty listed above does not apply to floor display models. The warranty for these models shall be 30 days from the date of retail purchase and only if U-Line's Product Registration Card included with the unit is completed and mailed back or electronically submitted to U-Line. This 30 day warranty does not apply to cosmetic damages. A proof of purchase may be required.

4. The following conditions are excluded from this limited warranty: use of cleaners other than the recommended stainless steel cleaners and U-Line Clear Ice Maker cleaner; installation charges; damages caused by disasters or acts of God, such as fire, floods, wind and lightning; damages incurred or resulting from shipping, improper installation, unauthorized modification, or misuse/abuse of the product; customer education calls; food loss and spoilage; door and water level adjustments (except during the first 30 days from the date of installation); defrosting the product; adjusting the controls; door reversal; and cleaning the condenser.

5. U-Line product are designed to operate in ambient temperatures between 50°F and 100°F unless otherwise noted in the product manual. Exposure to temperatures outside this range may cause degradation of performance and issue such as lower ice production or spoiled contents are not covered under the terms of this warranty as a result of that exposure. U-Line product may not be subjected to temperatures below 40F without following the winterization and vacation shutdown procedures in your product manual.

6. U-Line's Outdoor Limited Warranty, set forth in this Paragraph 6 shall apply to U-Line models deemed suitable for outdoor use by Underwriters Laboratory ("UL") as noted in the U-Line Product Catalog, U-Line's website and/or on the serial tag located inside the product.

   A. Outdoor product may come into contact with rain by virtue of outdoor use. Exposure to other sources of water shall also cause this warranty to be void, including flooding of the area in proximity of the unit greater than 1/8" deep in water, hurricanes, splashing of pool water, or directing a spray from a hose or similar device into and around the unit.

7. If a product defect is discovered during the applicable warranty period, you must promptly notify either U-Line at 8900 N. 55th Street, Milwaukee, Wisconsin 53223 USA or at +1.800.779.2547 or the dealer from whom you purchased the product. In no event shall such notification be received later than 30 days after the expiration of the applicable warranty period. U-Line may require that defective parts be returned, at your expense, to U-Line's factory in Milwaukee, Wisconsin, for inspection. Any action by you for breach of warranty must be commenced within one year after the applicable warranty period.

8. THIS LIMITED WARRANTY IS IN LIEU OF ANY AND ALL OTHER WARRANTIES, EXPRESS OR IMPLIED, INCLUDING ANY IMPLIED WARRANTY OF MERCHANTABILITY OR IMPLIED WARRANTY OF FITNESS FOR A PARTICULAR PURPOSE, ALL OF WHICH ARE DISCLAIMED. U-Line's sole liability and your exclusive remedy under this warranty is set forth in the paragraphs above. U-Line shall have no liability whatsoever for any incidental, consequential or special damages arising from the sale, use or installation of the product or from any other cause whatsoever, whether based on warranty (express or implied) or otherwise based on contract, tort or any other theory of liability.

Some states do not allow limitations on how long an implied warranty lasts or the exclusion or limitation of incidental or consequential damages, so the above limitations may not apply to you. This warranty gives you specific legal rights, and you may also have other rights which vary from state to state.

Warranty 6/2014 Rev.G