# 24” Built-In Wall Cabinet Hood

DA 3466

Image of DA 3496 36” built-in wall hood

# 24” Built-In Wall Cabinet Hood
# DA 3466

## DA 3466

**Features:**

- Straight stainless steel canopy
- Updated backlit controls
- Sound improved runners
- Designed for vented or recirculated use
- For wall cabinet installation
- Removable, dishwasher-safe stainless steel filters
- Expandable fume deflector
- Front mounted controls for lights and 4 fan speeds
- Polished stainless steel logo
- Automatic shut-off of intensive level, programmable for 10 minutes
- Automatic activation when fume deflector is expanded
- Integrated LED ClearView Lighting

| SPECIFICATIONS | |
|---|---|
| **DA 3466 — Item 28346655USA** | |
| Overall Unit Width | 23 7/16” (595 mm) |
| Overall Unit Height | 15 1/16” (384 mm) |
| Unit Depth Retracted | 10 13/16” (275 mm) |
| Unit Depth Extended | 16 3/4” (425 mm) |
| **Built-In** | |
| Minimum Opening Width | 22 1/8” (562 mm) |
| Minimum Opening Depth | 11 5/8” (295 mm) |
| Minimum Opening Height (Vented) | 16 15/16” (430 mm) |
| Minimum Opening Height (Recirculation) | 21 5/8” (550 mm) |
| **Custom Front Panel (Optional)** | **DML 400 kit is required** |
| Maximum Panel Thickness | 1” (30 mm) |
| Maximum Panel Weight | 2 3/4 lbs (1.3 kg) |
| **Fan** | |
| Fan Speeds | 4 |
| Maximum CFM | 625 CFM, (Reducing Collar is available to reduce Air flow to less than 400 CFM, more information on page 8) |
| **Duct** | |
| Duct Diameter | 6” (150 mm) |
| **Electrical** | |
| Electrical Requirements | 120V, 60Hz,15A |
| Power Cord | Molded NEMA 5-15 plug, 2.5 ft (0.75 m) |
| **Shipping** | |
| Shipping Weight | 27.6 lbs (12.5 kg) |
| Shipping Dimensions | 37 7/16” W x 20 1/2” H x 14” D |
| **Support** | |
| Call Miele | 800.843.7231 |
| Miele Website | www.mieleusa.com |
| 20/20 Link | 2020technologies.com |

## Optional Accessories:

DUU 150

Recirculation kit for straight ductwork

DUU 151

Recirculation kit for curved or bending ductwork

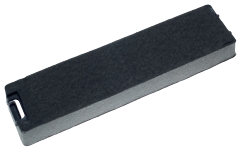

DKF13-1

OdorFree Charcoal filter required accessory for recirculation mode

DML 400

Installation kit for custom cabinetry

Reducing collar

Reducing collar limits air flow to less than 400 CFM

## INSTALLATION SPECIFICATIONS

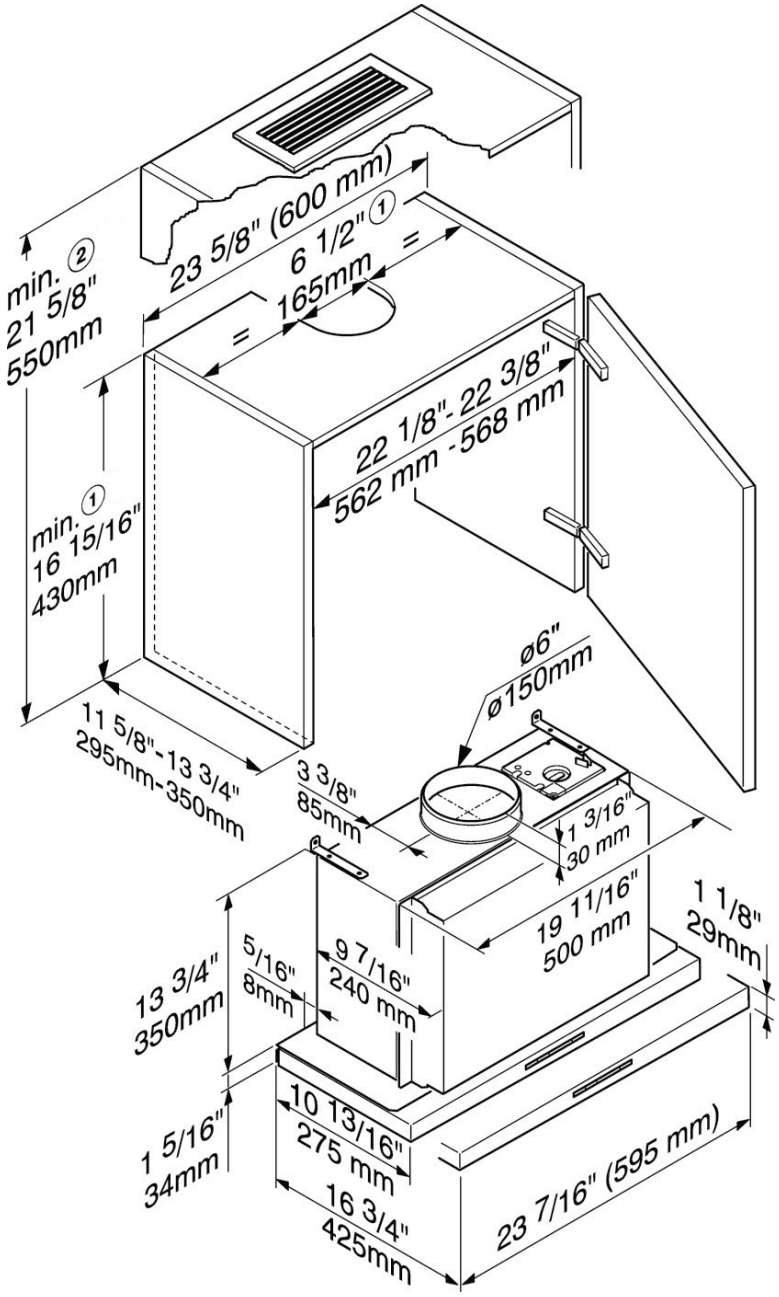


① Vented mode; consider accessories when measuring cabinet height and cut-outs (e.g. muffler).

② Recirculation mode with conversion kit DUU 151. (More information on page 7)

* The front of the fume deflector can be fitted with a front panel to match existing cabinetry. A DML 400 installation kit is required to install front panel to hide control panel.

**INSTALLATION SPECIFICATIONS**
Distance Between Cooktop and
Ventilation Hood (S)

Provided a larger distance is not given by the manufacturer of the cooktop, follow the minimum safety distances between a cooktop and the bottom of the hood.
Please also observe the information contained in the "IMPORTANT SAFETY INSTRUCTIONS" section of the manual.

| | Minimum distance S | |
|---|---|---|
| Cooking appliance | Miele products | Non-Miele products |
| Electric Cooktops | 24" (610 mm) | |
| Electric Barbeques and Fryers | 26" (660 mm) | |
| Multiburner Gas Cooktops<br>≤ 43,000 BTU/hr (12.6 W),<br>no burner > 15,000 BTU/hr (4.5 kW). | 26" (660 mm) | 30" (760 mm) |
| Multiburner Gas Cooktops<br>≤ 73,800 BTU/hr (21.6 W),<br>no burner > 16,500 BTU/hr (4.8 kW) | 30" (760 mm) | |
| Multiburner Gas Cooktops<br>> 73,800 BTU/hr (21.6 W),<br>or one of the burners > 16,500 BTU/hr (4.8 kW) | Not possible | |
| Single Burner Gas Cooktops<br>≤ 20,500 BTU/hr (6 kW) | 26" (660 mm) | 30" (760 mm) |
| Single Burner Gas Cooktops<br>> 20,500 BTU/hr (6 kW)<br>≤ 27,600 BTU/hr (8.1 kW) | 30" (760 mm) | |
| Single Burner Gas Cooktops<br>> 27,600 BTU/hr (8.1 kW) | Not possible | |

If you are installing a front panel made of wood or plastic to the hood, observe the safety distances given by the cooktop manufacturer regarding the use of easily flammable materials.

**INSTALLATION SPECIFICATIONS**
Cabinetry Depth Details

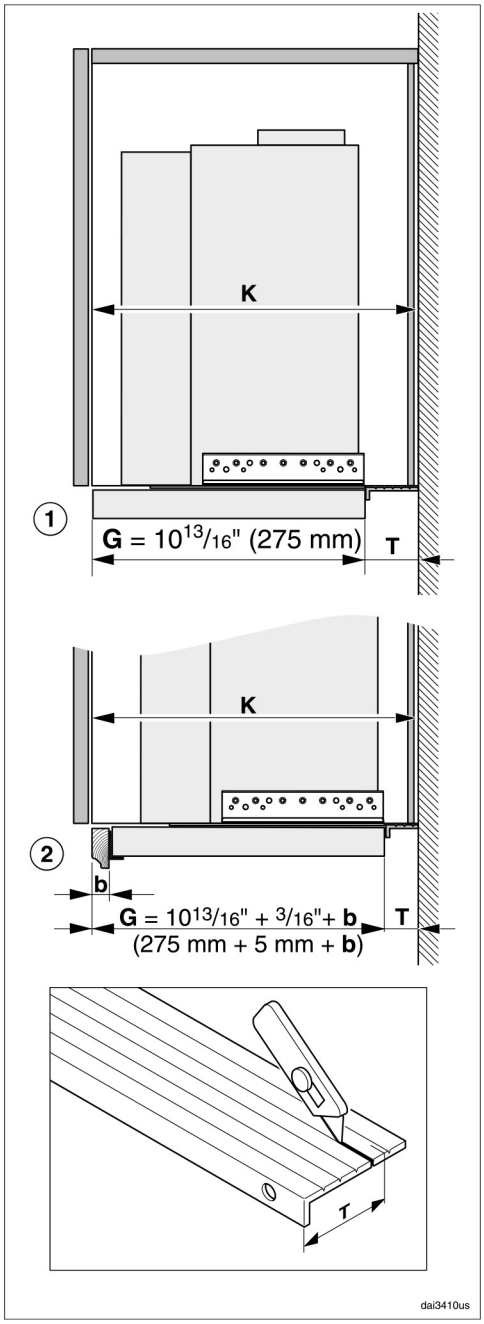


① Example: Installation without a front panel installed and with the front edge of the fume deflector flush with the front edge of the cabinetry.

② Example: Installation with a front panel to match the cabinetry This installation requires dimension **b** for the front panel plus $^{3}/_{16}$" (5 mm) for the DML 400 fixing bracket to be added to the shelf dimension.

To position the hood correctly, cut the spacer strip to the required depth **T** and then attach it to the back of the appliance:
**T**= Depth of cabinetry **K** minus depth of appliance **G**

- Cut the spacer strip supplied to measurement **T**. Score along the groove for the **next smaller** measurement as shown, and remove any extra.

**Recirculation Kit DUU 150**
(Optional accessory)

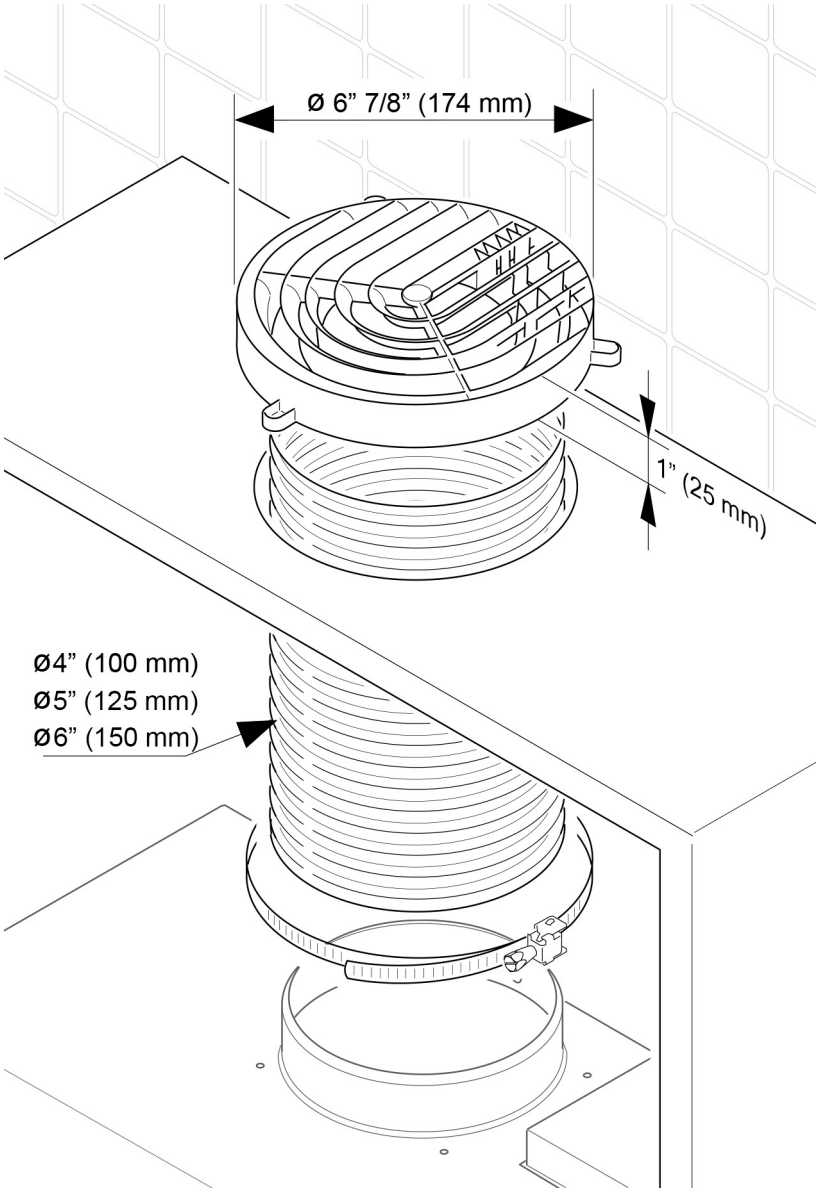

**Recirculation Kit DUU 151**
(Optional accessory)

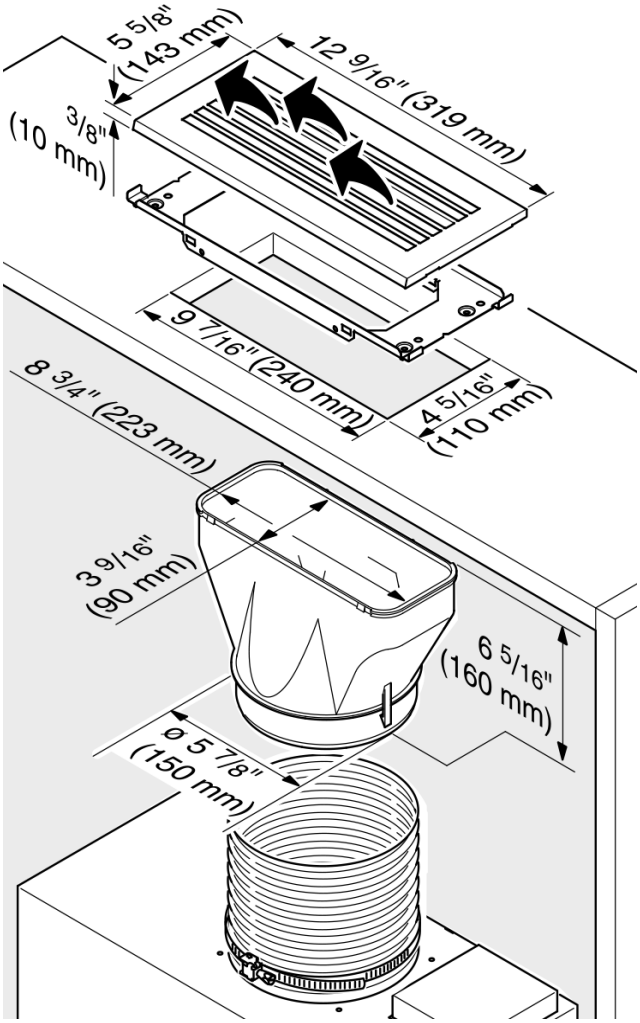

**Reducing Collar**
(optional accessory)

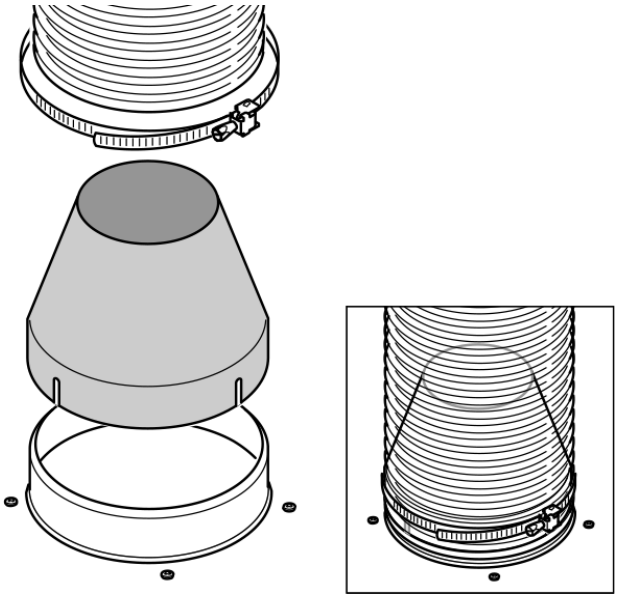

If you would like to reduce the enviromental impact of your ventilation system by limiting the CFM output the Reducing Collar can be installed. It reduces the air flow to less than 400 CFM. Check local building codes for maximum CFM requirements.