CGS990SETSS

GE Café™ 30" Free-Standing Range Gas Double Oven with Convection

Dimensions and Installation Information (in inches)

Electrical Requirements: 120v; 60Hz, 15A

Effective January 1, 1996, the National Electrical Code requires that new construction (not existing) utilize a 4-conductor connection to an electric range.

Receptacle Locations: Locally approved flexible service cord or conduit must be used because terminals are not accessible after range installation. See shaded area in drawing for location of electrical outlet box. Recommended outlet locations allow range to be installed directly against wall.

Installation information: Before installing, consult installation instructions packed with product for current dimensional data.

Optional accessories: Tall backguard JXS8055 (Available at additional cost)

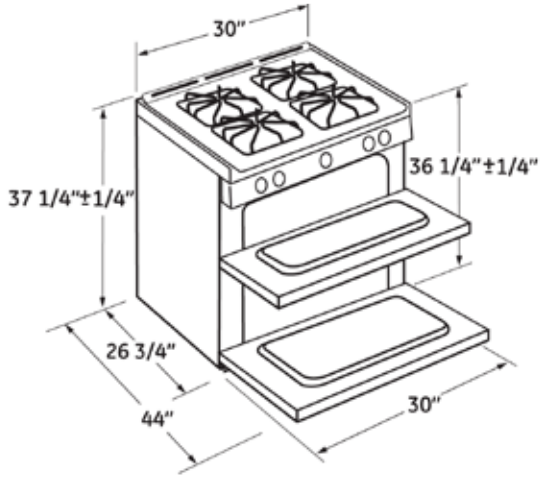

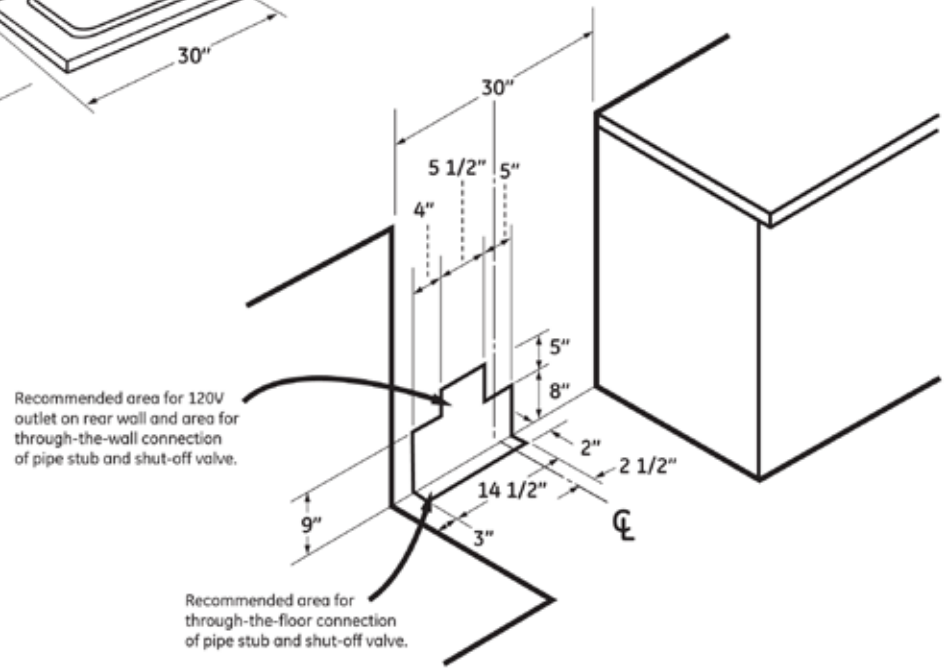

For answers to your Monogram,® GE Profile™ or GE® appliance questions, visit our website at geappliances.com or call GE Answer Center® service, 800.626.2000.

All GE ranges are equipped with an Anti-Tip device. The installation of this device is an important, required step in the installation of the range.

imagination at work

Specification Revised 5/11 230548

CGS990SETSS

GE Café™ 30" Free-Standing Range Gas Double Oven with Convection

Features and Benefits

- 6.7 cu. ft. oven capacity - Large capacity is ideal for big meals
- Gas Convection Oven - Circulates air throughout the oven cavity ensuring better baking and roasting results
- 20,000 BTU tri-ring burner - Three-in-one burner is designed for accelerated boiling and gentle simmering
- Self-Clean Oven - Conveniently cleans the oven cavity without the need for scrubbing
- Non-stick griddle - ideal for pancakes, bacon, sandwiches and more, the large non-stick griddle is convenient and easy to clean
- Precise Simmer burner - Allows for low, even heat distribution that is ideal delicate foods and sauces
- Center oval burner - Oval fifth burner in the center of the cooktop is large to accommodate odd-sized cookware or griddles
- Upfront controls - Easy-to-read graphics and one-touch control makes everyday cooking easy as ever
- Black gloss oven interior - Black oven interior adds a stylish touch to any kitchen
- Model CGS990SETSS – Stainless steel

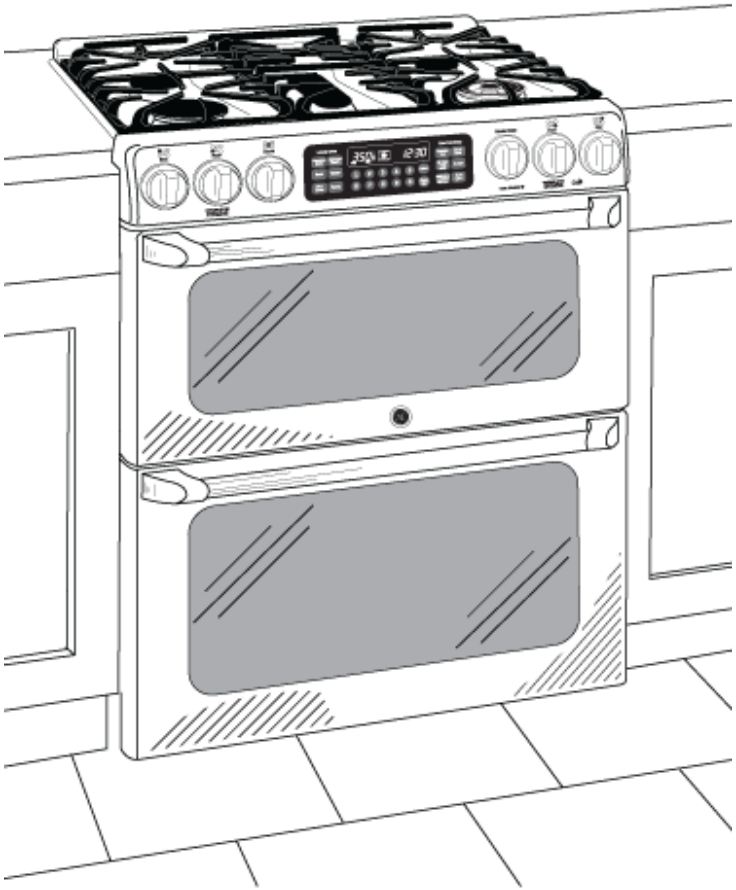

imagination at work