SPECIFICATIONS

AP-600 SERIES

RANGE HOOD

HVI 2100 CERTIFIED

600 CFM/5.5 Sones @ 0.10" SP.
500 CFM/4.5 Sones @ 0.10" SP.
300 CFM/1.5 Sones @ 0.10" SP.

- **Hood Dimensions**
  Overall bottom projection - 24"
  Available heights (without Soffit) - 10" and 18"
  Available widths: 30" and 36"

- **Hood**
  Stainless steel. Wall mounted. Install at least 24" above the cooking surface.

- **Lighting**
  3 - PAR16, 3.125" in length, type A screw-in base, 45 watt maximum Halogen lamps (included).

- **Ducting Options**
  Vertical outlet only. Vertical or Horizontal ducting transition achieved through vertical or horizontal duct adapter (included).

- **Filters**
  Aluminum grease filters (included).

- **Blower**
  Three speed, permanently split capacitor motor. Rated 120 volts, 60 hz.

- **Blower Wheel**
  Dual inlet, electronically balanced polymetric centrifugal blower wheels, 5 7/8" width 59 paddles.

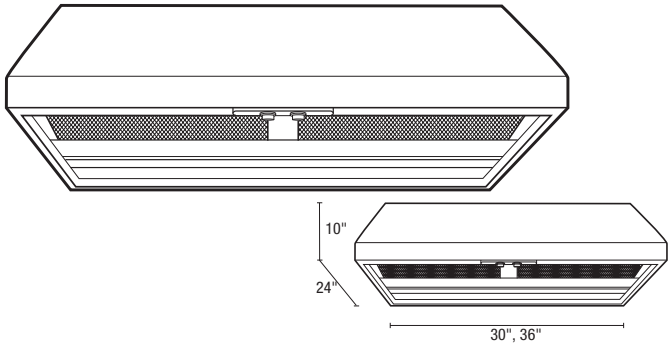

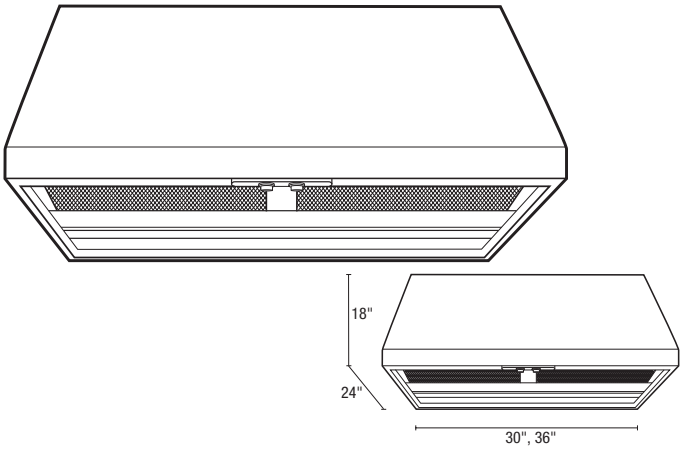

EXPANDED PERFORMANCE

Air Flow - CFM	Static Pressure (inches of w.g.) 0	0.1	0.25	0.375	0.5	0.625	Sones @ .1 SP	Fan Speed RPM	Power Watts	Apms
High Speed	638	600	537	458	342	143	5.5	1492	164	1.25
Medium Speed	529	500	444	382	278	116	4.5	1206	131	1.10
Low Speed	317	300	267	229	167	-	1.5	760	95	.90

PROJECT		ARCHITECT	
LOCATION		ENGINEER	
CONTRACTOR		SUBMITTED BY	DATE

FAN NUMBER	MODEL NUMBER	CFM	IN W.C.	RPM	WATTS	AMPS	SONES	QTY	OPTIONAL EQUIPMENT & REMARKS

Intertek

MEETS MADE IN AMERICA REQUIREMENTS OF ARRA

U.S.: 820 Lincoln Avenue
West Chester, Pennsylvania 19380-4466
Tel: (610) 692-7400 • 877-304-3785
Fax: (610) 696-8048

Canada: 8 Edvac Drive
Brampton, Ontario L6S 5P2
Tel: (905) 456-2033 • 800-250-8767
Fax: (905) 456-1015