UPDATED 2011 MODEL - 600 AND 300 CFM AVAILABLE

Tender

Decorative Collection

traditionally styled value rangehood

- wall canopy rangehood
- sleek styling
- 600 or 300 cfm motor
- 2 halogen lights
- 3 speed LED electronic controls
- 10 minute intensive speed setting
- dishwasher safe grease filters
- convertible to ductless*
- 6" round duct

* it is highly recommended that professional style cooking always be vented to the outside.

FABER

Size/Color/Model #

600 CFM models

30 Stainless (**NEW**)	TEND30SS
36 Stainless (**NEW**)	TEND36SS

300 CFM models

30 Stainless (**NEW**)	TEND30SS300
36 Stainless (**NEW**)	TEND36SS300

New backlit electronic controls with a blue LED light to indicate the current speed and lighting on / off

Designed to offer a high-end decorative look while taking into consideration great value. Traditional styling, new advanced electronic touch control features, and solid performance make the Tender a great choice in canopy rangehoods.

accessories

High Ceiling Chimney Kit

One 39" upper chimney to replace 21 10/16" upper chimney that came with hood

Stainless 620000648

Ductless Conversion Kit

Includes: • Lower Chimney with holes for ducting • Ductless Diverter Assembly • Vent Grates • Charcoal Filter

Stainless 620000649

Replacement Charcoal Filter

6093034

p.o. box 435 • Wayland, MA 01778 • tel: (508) 358-5353 • fax: (508) 358-5730 • e-mail: info@faberonline.com • www.faberonline.com

Dimensional Diagrams

30” Ducted

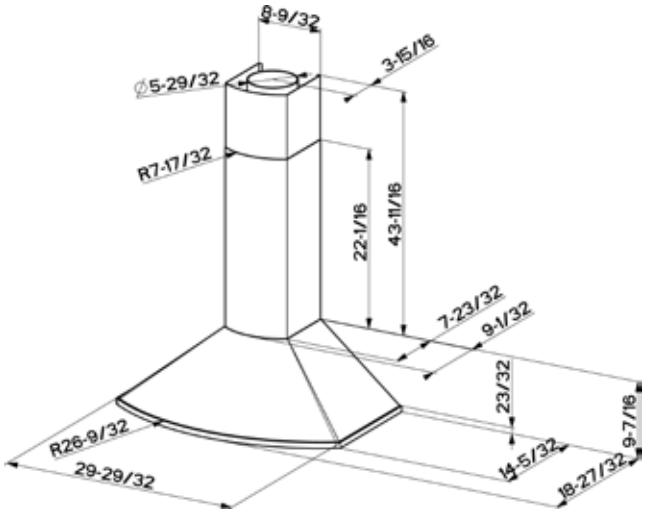

36” Ducted

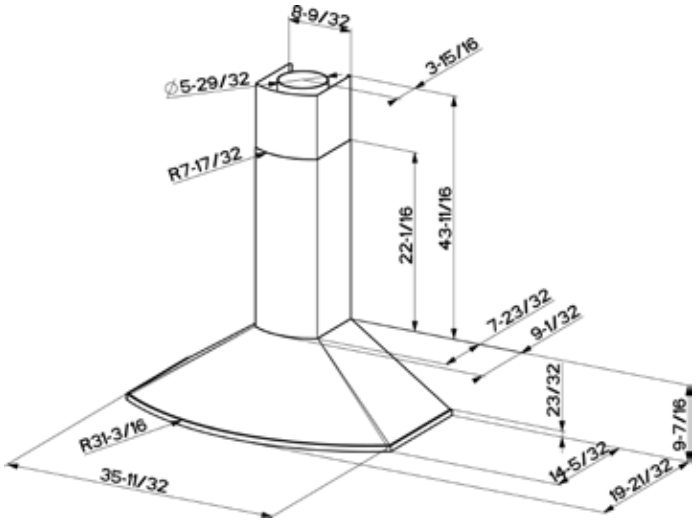

Pre-Planning Your Installation - Important: Consult the installation instructions before you begin installing this rangehood.

Ducted

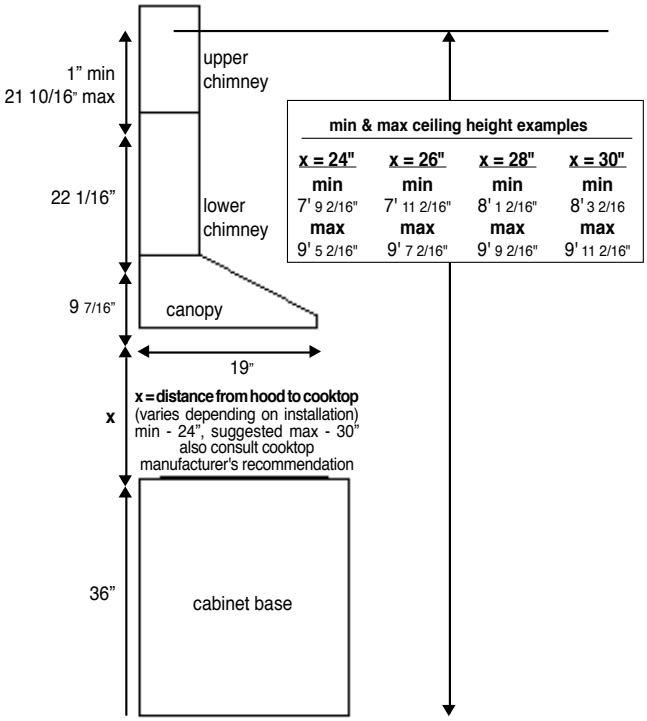

min & max ceiling height examples

x = 24"	x = 26"	x = 28"	x = 30"
min	**min**	**min**	**min**
7' 9 2/16"	7' 11 2/16"	8' 1 2/16"	8' 3 2/16
max	**max**	**max**	**max**
9' 5 2/16"	9' 7 2/16"	9' 9 2/16"	9' 11 2/16"

For ducted installations the chimneys are adjustable and designed to meet varying ceiling heights between 7’ 9 2/16” and 9’ 11 2/16” depending on the distance between the bottom of the hood and the cooktop (distance x in the ducted diagram).

For shorter ceilings, have the chimney cover(s) cut at a sheet metal shop. For higher ceiling installations, the **High Ceiling Chimney Kit** includes a new 39” upper chimney which would replace the 21 10/16” upper chimney that came with the hood.

Note: If 24” or 30” **High Backsplash** is being installed, the distance between the bottom of the hood and the cooktop (distance x in diagram) is equal to the height of the **Backsplash**.

Pre-Planning Your Installation - Important: Consult the installation instructions before you begin installing this rangehood.

Make your ductrun as straight and short as possible. The ductrun should not exceed 35 equivalent feet if ducted with the required minimum of 6” round duct. Count 45° angles as 3 feet, 90° elbows as 5 feet, and 90° flat elbows as 12 feet.

For best results, use no more than three 90° elbows. Make sure that there is a minimum of 24” of straight duct between elbows if more than one is used. Do not install two elbows together. If you must elbow right away, do it as far away from the hood’s exhaust opening as possible.

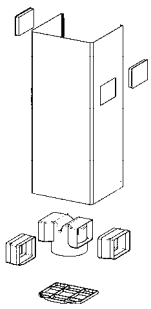

Ductless Installations*

For installations where ductwork is impossible or highly impractical, a **Ductless Conversion Kit** is available. A charcoal filter, which attaches under the blower assembly, absorbs smoke and odors. A ductless diverter assembly directs the air out to a lower chimney with vent grates cut into the sides.

*** it is highly recommended that professional style cooking always be vented to the outside.**

Rev. 12/10

WARNING! Product specifications are subject to change without notification. Consult the installation instructions before you begin installing this rangehood.